GENERAL NOTES

1. CURRENT OWNER OF RECORD:
   VSH REALTY INC.
   SITE ADDRESS: 53 MAIN STREET, FLORENCE, MA
   ASSESSORS MAP 17C LOT 197
   DEED REFERENCE: BOOK 1632 PAGE 279

   JAMES G. MALLOUK
   SITE ADDRESS: 55 MAIN STREET, FLORENCE, MA
   ASSESSORS MAP 23A LOT 077
   DEED REFERENCE: BOOK 6321 PAGE 287
2. THIS PLAN IS THE RESULT OF AN ON-THE-GROUND SURVEY PERFORMED BY ODONE SURVEY & MAPPING ON AUGUST 27, 2015. SURVEY BY TRIMBLE S6 TOTAL STATION.
3. THE PROPERTY SHOWN HEREON IS THE SAME PROPERTY AS DESCRIBED IN COMMITMENT FOR TITLE INSURANCE, AS ISSUED BY FIRST AMERICAN TITLE INSURANCE COMPANY WITH AN EFFECTIVE DATE OF AUGUST 11, 2015 (#53) AND AUGUST 13, 2015 (#55).
4. THE TRACTS AND PARCELS OF LAND DEPICTED ON THIS SURVEY ARE CONTIGUOUS WITH NO GAPS OR GORES BETWEEN RESPECTIVE PARCELS.
5. PROPERTIES SHOWN HEREON HAVE DIRECT ACCESS TO MAIN STREET A DESIGNATED PUBLIC WAY. THERE ARE NO PROPERTY LINES LOCATED WITHIN THE BOUNDS OF SAID STREETS.
6. NORTHAMPTON ZONING DISTRICT: GENERAL BUSINESS (GB)
7. THE VERTICAL POSITIONS SHOWN ON THIS PLAN ARE BASED ON KEYNET RTK GPS NETWORK AND IS SUBJECT TO FURTHER ADJUSTMENT TO ANY LOCAL NGS BENCHMARKS. THE VERTICAL DATUM IS RELATIVE TO NAVD 1988.
8. UTILITY NOTE: LOCATION OF UTILITIES SHOWN HEREON WERE DETERMINED BY OBSERVATION OF ABOVE GROUND EVIDENCE TOGETHER WITH PLANS OF RECORD. THE RELATIONSHIP BETWEEN ACTUAL FIELD LOCATION AND LOCATION SHOWN HEREON MUST BE CONSIDERED APPROXIMATE. THE SURVEYOR MAKES NO GUARANTEES THAT THE UNDERGROUND UTILITIES SHOWN COMPRISE ALL SUCH UTILITIES IN THE AREA, EITHER IN SERVICE OR ABANDONED. THE SURVEYOR HAS NOT PHYSICALLY LOCATED THE UNDERGROUND UTILITIES AND FURTHER DOES NOT WARRANT THAT THE UNDERGROUND UTILITIES SHOWN ARE IN THE EXACT LOCATION AS INDICATED ON THIS PLAN. BEFORE CONSTRUCTION CALL "DIG SAFE" 1-888-344-7233.
9. FLOOD NOTE: BY GRAPHIC PLOTTING ONLY, THIS PROPERTY IS IN ZONE C OF THE FLOOD INSURANCE RATE MAP, COMMUNITY PANEL NO. 250167 0002 A WHICH BEARS AN EFFECTIVE DATE OF APRIL 3, 1978.

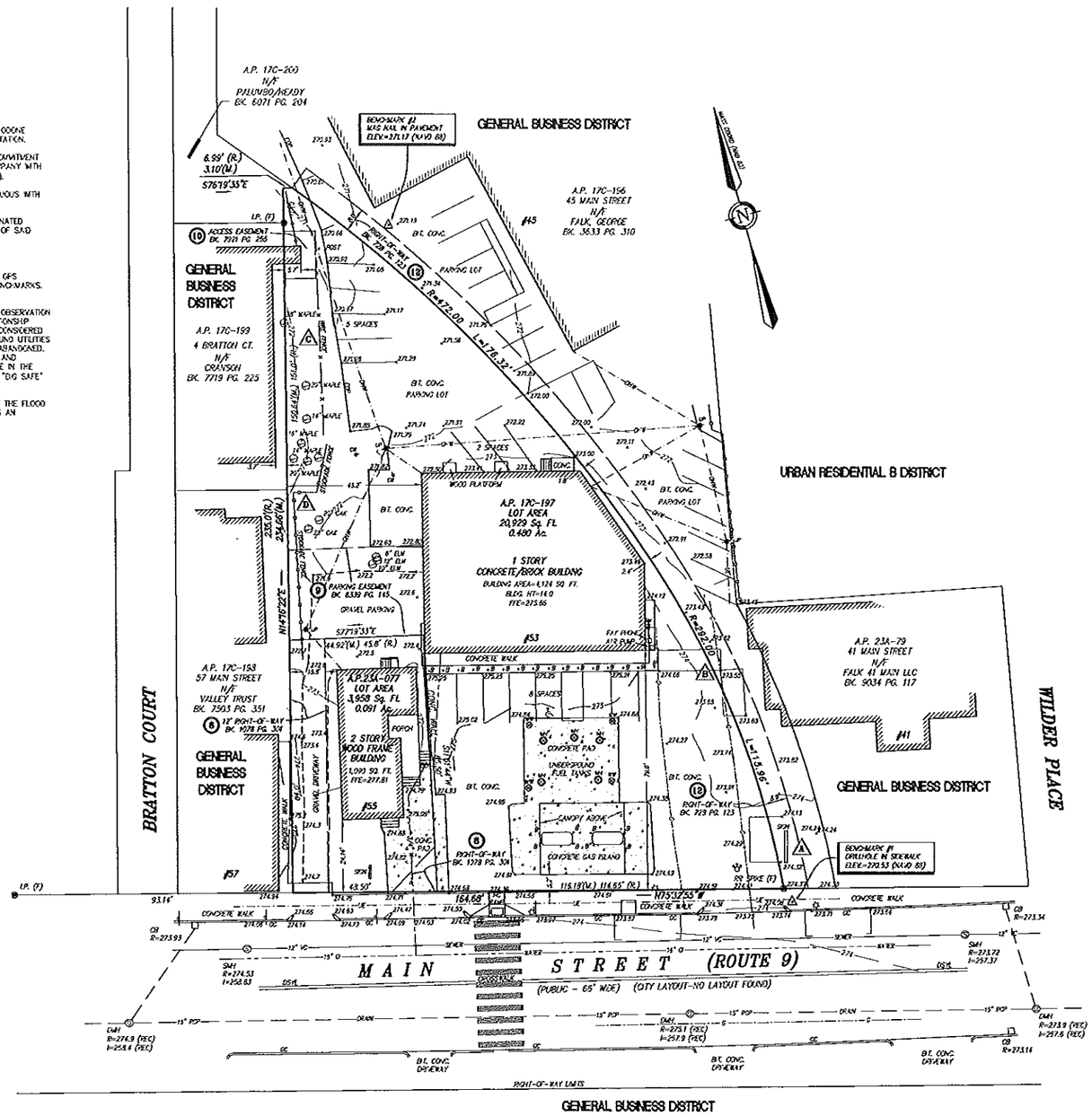

GENERAL BUSINESS DISTRICT

LEGEND

- EXISTING BUILDING
- GAS LINE/GAS VALVE
- OVERHEAD WIRES
- WATER LINE/WATER GATE
- SEWER LINE/SEWER MANHOLE
- FENCE
- MAJOR CONTOUR
- MINOR CONTOUR
- BOLLARD
- CATCH BASIN
- FIRE HYDRANT
- GAS METER
- LIGHT POLE
- UTILITY POLE
- GUY WIRE
- SIGN
- HANDICAP PARKING
- MONITORING WELL
- A.P. ASSESSORS PARCEL
- BK. PG. DEED BOOK/PAGE
- BIT. CONC. BITUMINOUS CONCRETE
- CONC. CONCRETE SURFACE
- CC CONCRETE CURB
- DSYL DOUBLE SOLID YELLOW LINE
- GC GRANITE CURB
- C.L.F. CHAIN LINK FENCE
- EOP EDGE OF PAVEMENT
- (F) FOUND
- N/F NOW OR FORMERLY
- SCHEDULE B EXCEPTION ITEM
- ENCROACHMENT SYMBOL

GRAPHIC SCALE

20 0 10 20 40 80

(IN FEET)
1 inch = 20 ft.

SURVEY OBSERVATIONS

- A. SIGN OWNED BY FALK LOCATED WITH RIGHT-OF-WAY AS SHOWN.
- B. NO PARKING STRIPING EXTENDS OVER PROPERTY LINE AS SHOWN.
- C. WIRE FENCE LOCATED ON SURVEYED PROPERTY BY 10.5 FEET AS SHOWN.
- D. STOCKADE FENCE LOCATED ON SURVEYED PROPERTY FEET AS SHOWN.

PROPERTY DESCRIPTION

RECORD DESCRIPTION (#53 MAIN STREET)
COMMITMENT FOR TITLE INSURANCE ISSUED BY FIRST AMERICAN TITLE INSURANCE COMPANY DATED AUGUST 11, 2015.

A CERTAIN PARCEL OF LAND WITH THE BUILDING THEREON SITUATED ON THE NORTHERLY SIDE OF MAIN STREET IN THE VILLAGE OF FLORENCE, IN THE NORTHAMPTON, MASSACHUSETTS AND BEING DESIGNATED AS "BERNARD FLEMING, 21, 112 S.F. +/-" AS SHOWN ON A PLAN ENTITLED "PLAN OF LAND IN FLORENCE, NORTHAMPTON, MASSACHUSETTS PREPARED FOR V.S.H. REALTY, INC." DATED APRIL 6, 1972, ALMER HUNTLEY, JR. AND ASSOCIATES, INC., REGISTERED LAND SURVEYORS AND CIVIL ENGINEERS RECORDED IN PLAN BOOK 81, PAGE 55, AND BOUNDED AND DESCRIBED AS FOLLOWS:
SOUTHERLY BY MAIN STREET 114.65 FEET.

WESTERLY BY LAND OF LENA E. MCCARTHY AS SHOWN ON SAID PLAN 65.50 FEET. SOUTHERLY AGAIN BY LAND OF SAID LENA E. MCCARTHY 45.80 FEET.
WESTERLY AGAIN BY LAND OF ALBERT AND CARRIE O. WESSE AND LAND OF MARGARET BERNARD AS SHOWN ON SAID PLAN 151.00 FEET.

NORTHERLY BY LAND OF WILFRED D. AND MARY E. SPENCER AS SHOWN ON SAID PLAN 6.59 FEET AND,

NORTHEASTERLY, EASTERLY AND SOUTHEASTERLY BY LAND OF JAMES C. AND BERNICE M. PHELPS-SPUR TRACK BY TWO LINES AS SHOWN ON SAID PLAN MEASURING 176.33 FEET AND 114.65 FEET RESPECTIVELY.

SAID PREMISES ARE CONVEYED WITH THE BENEFIT OF A RIGHT-OF-WAY TO BE USED FOR ANY AND ALL PURPOSES AND AT ALL SEASONS OF THE YEAR OVER A STRIP OF LAND 12 FEET WIDE ALONG THE WESTERLY PORTION OF THE LOT DESIGNATED "LENA E. MCCARTHY" AND ADJOINING LAND OF ALBERT AND CARRIED O. WESSE FROM MAIN STREET, THE ENTIRE LENGTH TO THE ABOVE DESCRIBED LAND.

ALSO WITH THE BENEFIT OF A RIGHT-OF-WAY TO BE USED FOR ANY AND ALL PURPOSES AND AT ALL SEASONS OF THE YEAR OVER A TRIANGULAR STRIP OF LAND MEASURING 15 FEET ON MAIN STREET AND 15 FEET BY THE BOUNDARY LINE OF THE ABOVE DESCRIBED PREMISES AND LAND OF LENA E. MCCARTHY, ALL AS SHOWN ON THE ABOVE DESCRIBED PLAN AND BEING THE SAME RIGHT-OF-WAY RESERVED BY BERNARD L. FLEMING IN HIS DEED TO GEORGE F. MCCARTHY AND LENA
E. MCCARTHY DATED SEPTEMBER 18, 1950 DULY RECORDED WITH SAID DEEDS IN BOOK 1078, PAGE 301.

GRANTING ALL THE RIGHTS, EASEMENT, AND INTEREST CONVEYED IN A DEED TO ARTHUR D. FOSTER HIS HEIRS AND ASSIGNS FROM THE CENTRAL OIL AND GAS COMPANY, DATED JANUARY 4, 1917 AND RECORDED WITH SAID DEEDS IN BOOK 728, PAGE 123 TOGETHER WITH THE RIGHTS RESERVED BY WALTER K. HOMES AND WALLACE A. HOMES IN THEIR DEED TO THE INTERNATIONAL SILVER COMPANY DATED AUGUST , 1929, RECORDED WITH SAID DEEDS IN BOOK 657, PAGE 215.

RECORD DESCRIPTION (#55 MAIN STREET)
COMMITMENT FOR TITLE INSURANCE ISSUED BY FIRST AMERICAN TITLE INSURANCE COMPANY DATED AUGUST 13, 2015.

A CERTAIN TRACT OF LAND, WITH THE BUILDINGS THEREON, SITUATED ON THE NORTHERLY SIDE OF MAIN STREET, IN THE VILLAGE OF FLORENCE, IN NORTHAMPTON, HAMPSHIRE COUNTY, MASSACHUSETTS, AND BEING THAT TRACT SHOWN ON PLAN ENTITLED, "PLAN OF LAND IN FLORENCE, MASS., BELONGING TO BERNARD FLEMING, SCALE 1" =", NORTHAMPTON, MASS., 8/2/50, DAVIS ENG. CO., E.K. ATKINS, C.E. W.O.L", WHICH PLAN IS RECORDED WITH HAMPSHIRE COUNTY REGISTRY OF DEEDS. FURTHER REFERENCE MAY BE HAD TO SAID PLAN FOR A MORE PARTICULAR DESCRIPTION OF THE BOUNDARIES OF SAID PROPERTY. SAID PROPERTY IS FURTHER BOUNDED AND DESCRIBED AS FOLLOWS:

COMMENCING ON THE NORTHERLY SIDE OF MAIN STREET AT LAND NOW OR FORMERLY OF GAE WESSE; THENCE NORTHEASTERLY ALONG LAND NOW OR FORMERLY OF SAID WESSE TO A CORNER MARKED BY AN IRON PIN A DISTANCE OF EIGHT-FOUR (84) FEET; THENCE

EASTERLY ALONG LAND NOW OR FORMERLY OF GAE FLEMING TO A CORNER MARKED BY AN IRON PIN A DISTANCE OF FORTY-FIVE AND EIGHT-TENTHS (45.8) FEET; THENCE

SOUTHERLY ALONG LAND NOW OR FORMERLY OF SAID FLEMING TO MAIN STREET A DISTANCE OF EIGHTY-FIVE AND FIVE TENTHS (85.5) FEET; THENCE

WESTERLY ALONG SAID MAIN STREET TO THE PLACE OF BEGINNING A DISTANCE OF FORTY-EIGHT AND FIVE-TENTHS (48.5) FEET MORE OR LESS.

SURVEY DESCRIPTION (#55 MAIN STREET)

A CERTAIN PARCEL OF LAND SITUATED ON THE NORTHERLY SIDE OF MAIN STREET IN THE VILLAGE OF FLORENCE, IN THE CITY OF NORTHAMPTON, MASSACHUSETTS AND BEING SHOWN ON A PLAN ENTITLED "PLAN OF LAND IN FLORENCE, NORTHAMPTON, MASSACHUSETTS PREPARED FOR V.S.H. REALTY, INC." DATED APRIL 6, 1972, RECORDED IN PLAN BOOK 81, PAGE 55, BOUNDED AND DESCRIBED AS FOLLOWS:

BEGINNING AT A POINT ON THE NORTHERLY SIDELINE OF MAIN STREET WHICH POINT IS THE SOUTHEAST CORNER OF THE HEREIN DESCRIBED PARCEL;
THENCE N 75°32'55" W A DISTANCE OF 115.18';
THENCE N 11°51'44" E A DISTANCE OF 83.53';
THENCE N 77°19'33" W A DISTANCE OF 44.92';
THENCE N 14°16'22" E A DISTANCE OF 150.64';
THENCE S 76°19'35" E A DISTANCE OF 3.10';
THENCE ALONG A CURVE TO THE RIGHT HAVING A RADIUS OF 472.00', WITH AN ARC LENGTH OF 176.32';
THENCE ALONG A COMPOUND CURVE TO THE RIGHT HAVING A RADIUS OF 232.00', WITH AN ARC LENGTH OF 115.95' TO THE POINT OF BEGINNING,
HAVING AN AREA OF 20,929 SQUARE FEET OR 0.480 ACRES

SURVEY DESCRIPTION (#53 MAIN STREET)

A CERTAIN TRACT OF LAND SITUATED ON THE NORTHERLY SIDE OF MAIN STREET, IN THE VILLAGE OF FLORENCE, IN NORTHAMPTON, HAMPSHIRE COUNTY, MASSACHUSETTS, AND BEING SHOWN ON PLAN ENTITLED, "PLAN OF LAND IN FLORENCE, MASS., BELONGING TO BERNARD FLEMING, DATED, 8/2/50, WHICH PLAN IS RECORDED WITH HAMPSHIRE COUNTY REGISTRY OF DEEDS IN PLAN BOOK 36, PAGE 13, BOUNDED AND DESCRIBED AS FOLLOWS:

BEGINNING AT A POINT ON THE NORTHERLY SIDELINE OF MAIN STREET WHICH POINT IS THE SOUTHEAST CORNER OF THE HEREIN DESCRIBED PARCEL;
THENCE N 75°32'55" W A DISTANCE OF 48.50';
THENCE N 14°16'22" E A DISTANCE OF 84.00';
THENCE S 77°19'33" E A DISTANCE OF 44.92';
THENCE S 11°51'44" W A DISTANCE OF 83.53';
WHICH IS THE POINT OF BEGINNING,
HAVING AN AREA OF 3,958 SQUARE FEET OR 0.091 ACRES

EXCEPTIONS – SCHEDULE B, SECTION 2

#53 MAIN STREET

EXCEPTIONS FROM COVERAGE, SCHEDULE B SECTION 2, COMMITMENT FOR TITLE INSURANCEISSUED BY FIRST AMERICAN TITLE INSURANCE COMPANY DATED AUGUST 11, 2015.

NOTE: EXCEPTION ITEMS NOT LISTED BELOW ARE STANDARD TITLE EXCEPTIONS AND/OR ARE NOT MATTERS OR ISSUES THAT PERTAIN TO THIS SURVEY.

8. RIGHTS OF OTHERS TO USE RIGHTS OF WAY RESERVED IN A DEED DATED SEPTEMBER 18, 1950 RECORDED IN BOOK 1078, PAGE 301. (AFFECTS PROPERTY AS SHOWN)
9. EASEMENT AGREEMENT AND RIGHT OF FIRST REFUSAL FROM CUMBERLAND FARMS, INC. TO JAMES G. MALLOUK AND LOUISE S. MALLOUK DATED AUGUST 2, 2001 RECORDED IN BOOK 6339, PAGE 145. (AFFECTS PROPERTY AS SHOWN)
10. DECLARATION OF ACCESS EASEMENT, COVENANTS AND CONDITIONS BY AND BETWEEN CUMBERLAND FARMS, INC., AND CHRISTOPHER A. KENNEDY RECORDED ON JULY 23, 2004 IN BOOK 7921, PAGE 255. (AFFECTS PROPERTY AS SHOWN)
11. DECISION OF THE ZONING BOARD OF APPEALS OF THE CITY OF NORTHAMPTON RECORDED ON OCTOBER 11, 2012 IN BOOK 11375, PAGE 222. (PERTAINS TO MATTERS OF LAND USE AND CANNOT BE SHOWN)
12. RIGHT TO USE A RIGHT OF WAY OVER AN EIGHT (8) FOOT STRIP ADJACENT TO A RAILROAD TRACK AND RIGHT TO USE SIDETRACK AS SET FORTH IN A DEED DATED JANUARY 4, 1917 RECORDED IN BOOK 728, PAGE 123 AND POSSIBLE REQUIREMENT TO OBTAIN CONSENT PURSUANT TO M.G.L. C. 43 SECTION 58A FROM THE SUCCESSOR OF THE NEW YORK NEW HAVEN & HARTFORD RAILROAD. (AFFECTS PROPERTY AS SHOWN)

#55 MAIN STREET

EXCEPTIONS FROM COVERAGE, SCHEDULE B SECTION 2, COMMITMENT FOR TITLE INSURANCEISSUED BY FIRST AMERICAN TITLE INSURANCE COMPANY DATED AUGUST 13, 2015.

8. RIGHTS OF WAY RESERVED IN A DEED OF BERNARD L. FLEMING TO GEORGE F. MCCARTHY AND LENA E. MCCARTHY DATED SEPTEMBER 18, 1950 AND RECORDED IN BOOK 1078, PAGE 301. (AFFECTS PROPERTY AS SHOWN)
9. EASEMENT AGREEMENT AND RIGHT OF FIRST REFUSAL BETWEEN CUMBERLAND FARMS AND JAMES G. MALLOUK AND LOUISE S. MALLOUK DATED AUGUST 2, 2001 AND RECORDED IN BOOK 6339, PAGE 145. (AFFECTS PROPERTY AS SHOWN)
10. DECISION OF NORTHAMPTON ZONING BOARD OF APPEALS DATED AUGUST 23, 2001 AND RECORDED IN BOOK 6426, PAGE 66. (PERTAINS TO MATTERS OF LAND USE AND CANNOT BE SHOWN)

REVISIONS:

REV	DATE	COMMENT
1		
2		
3		
4		
5		

PREPARED BY:
ODONE SURVEY & MAPPING
SURVEYING - MAPPING - PLANNING & CONSULTING
291 Main Street, Suite 5
Northborough, MA 01532
Tel: 508-351-6022 Fax: 508-351-6533

SURVEYOR'S CERTIFICATE

TO: CUMBERLAND FARMS INC., HINCKLEY ALLEN AND SNYDER LLP AND FIRST AMERICAN TITLE INSURANCE COMPANY.

THIS IS TO CERTIFY THAT THIS MAP OR PLAT AND THE SURVEY ON WHICH IT IS BASED WERE MADE IN ACCORDANCE WITH THE 2011 MINIMUM STANDARD DETAIL REQUIREMENTS FOR ALTA/ACSM LAND TITLE SURVEYS, JOINTLY ESTABLISHED AND ADOPTED BY ALTA AND NSPS, AND INCLUDES ITEMS 1, 2, 3, 4, 5, 6(a), 7(a), 7(b)(1), 7(c), 8, 9, 11(b), 13, 16-19 OF TABLE A THEREOF.
THE FIELD WORK WAS COMPLETED ON AUGUST 27, 2015.

COMMONWEALTH OF MASSACHUSETTS
GLENN D. ODONE
No. 45068
PROFESSIONAL LAND SURVEYOR

GLENN D. ODONE JR.
REGISTERED LAND SURVEYOR NO. 45068
COMMONWEALTH OF MASSACHUSETTS

PREPARED FOR:
Cumberland FARMS
100 CROSSING BOULEVARD
FRAMINGHAM, MA 01702

PROJECT LOCATION:
53 & 55 MAIN STREET
FLORENCE, MA 01062

RAZE & REBUILD
STORE # STATION V#

CIVIL ENGINEER:
CIVIL DESIGN GROUP, LLC
21 HIGH STREET, SUITE 207
NORTH ANDOVER, MA 01845
www.cdgengineering.com
p: 978-794-5400 f: 978-914-6161

SHEET:
ALTA/ACSM
LAND TITLE SURVEY

CFG 02.0

DATE: OCTOBER 16, 2015

DWG FILE: 0884-01A
PROJECT NO. 20150884

GENERAL NOTES

1. [illegible]
2. THE PROJECT SITE [illegible]
3. [illegible]
4. [illegible]
5. [illegible]
6. [illegible]
7. [illegible]
8. [illegible]

SITE LAYOUT NOTES

1. REFER TO ARCHITECTURAL DRAWINGS FOR EXACT BUILDING DIMENSIONS AND FINISH FLOOR ELEVATIONS, UTILITY METERS, ENTRANCE DETAILS, BUILDING SIGNAGE, ETC.
2. ALL LINES OF PAVEMENT SHALL BE CUTTERS UNLESS OTHERWISE NOTED.
3. ALL CURBS SHALL BE [illegible] CONCRETE AND MONOLITHIC CONCRETE AND CONCRETE CURB SHALL BE VERTICAL CONCRETE UNLESS OTHERWISE SPECIFIED. [illegible] CONCRETE CURB SHALL MEET [illegible] PAVEMENT LIMITS.
4. NON-ACCESSIBLE CONCRETE PARKING SPACE DIMENSIONS AS SHOWN ON THE PLAN ARE 10' WIDE [illegible] LONG. NON-STREET PARKING SPACES DIMENSIONS AS SHOWN ON THE PLAN ARE 9' WIDE [illegible] LONG.
5. PAVEMENT MARKINGS AND STRIPING SHALL PAINTED WITH 2 COATS OF WHITE [illegible] PER PLAN PER FEDERAL [illegible] TYPE I.
6. PAVEMENT LETTERS SHALL BE 2' WIDE [illegible] LONG.
7. STOP BARS SHALL BE 18" WIDE AND DOUBLE LINES SHALL BE 4" IN WIDTH (SEE SITE PLAN FOR LENGTH & COLOR).
8. ACCESSIBLE PARKING SPACES SHALL CONFORM TO THE LATEST EDITION OF THE REGULATIONS OF THE AMERICANS WITH DISABILITIES ACT (ADA) AND THE MOST RECENT ACCESS BOARD (ABA) AS SHOWN ON THE SITE PLANS.
9. ACCESSIBLE PARKING AISLE STRIPING SHALL CONSIST OF 4" TRUE WHITE BLUE LINES OPERATED AT A 45 DEGREE ANGLE AND SPACED 3' ON CENTER.
10. ELECTRICAL AND ACCESSIBLE SIGNS SHALL CONFORM TO THE LATEST EDITION OF THE MANUAL ON UNIFORM TRAFFIC CONTROL DEVICES (MUTCD) FOR COLOR AND SIZE.
11. ALL PLAN VIEW WHITE THE RIGHT OF WAY SHALL CONFORM TO MULTI-STATE/STATE STANDARDS. ACCESSIBLE RAMP LENGTHS MAY VARY REFER TO SITE PLAN FOR SPECIFIC DIMENSIONS.
12. [illegible]
13. REPLACEMENT PAVEMENT TO A DEPTH OF MILL AND OVERLAY THICKNESS WHICH THE OUTER-MOST SHALL MATCH EXISTING PAVEMENT THICKNESS.
14. SITE LIGHTS TO BE INSTALLED PER DETAIL. CONTRACTOR SHALL NOTIFY THE ENGINEER & THE ELECTRICAL CONTRACTOR BE PROVIDED DUE TO [illegible] REFER TO DETAILS FOR THE LIGHT POLE BASE DETAILS AND SPECIFICATIONS.
15. CROSSWALKS AND PARKING SPACES WHICH THE WORK OCCUPIES SHALL BE ZONE THERMOPLASTIC.

LAND COVERAGE CALCULATIONS

TOTAL AREA: 0.57 ACRES

COVER	EXISTING	PROPOSED
[illegible]	[illegible]	[illegible]
[illegible]	[illegible]	[illegible]
[illegible]	[illegible]	[illegible]
TOTAL	[illegible]	[illegible]

PARKING & LOADING INFORMATION

USE	REQUIRED	PROVIDED
[illegible]	[illegible]	[illegible]
[illegible]	[illegible]	[illegible]
[illegible]	[illegible]	[illegible]

ZONING INFORMATION

ZONING DISTRICT: GENERAL BUSINESS (GB)

REGULATION	REQUIRED	EXISTING	PROPOSED
MIN. LOT AREA	N/A	[illegible]	N/A
MIN. LOT FRONTAGE	N/A	[illegible]	N/A
MIN. LOT WIDTH	N/A	[illegible]	N/A
MIN. FRONT SETBACK	[illegible]	[illegible]	[illegible]
MIN. SIDE SETBACK	[illegible]	[illegible]	[illegible]
MIN. REAR SETBACK	[illegible]	N/A	N/A
MIN. FRONT SETBACK (PARKING)	[illegible]	[illegible]	[illegible]
MIN. SIDE SETBACK (PARKING)	[illegible]	[illegible]	[illegible]
MIN. REAR SETBACK (PARKING)	[illegible]	N/A	N/A
MAX. BUILDING HEIGHT	[illegible]	[illegible]	[illegible]
MINIMUM OPEN SPACE	[illegible]	[illegible]	[illegible]

* PURSUANT TO SECTION [illegible], VARIANCE REQUIRED. SHALL BE [illegible] FROM PLANNING BOARD.

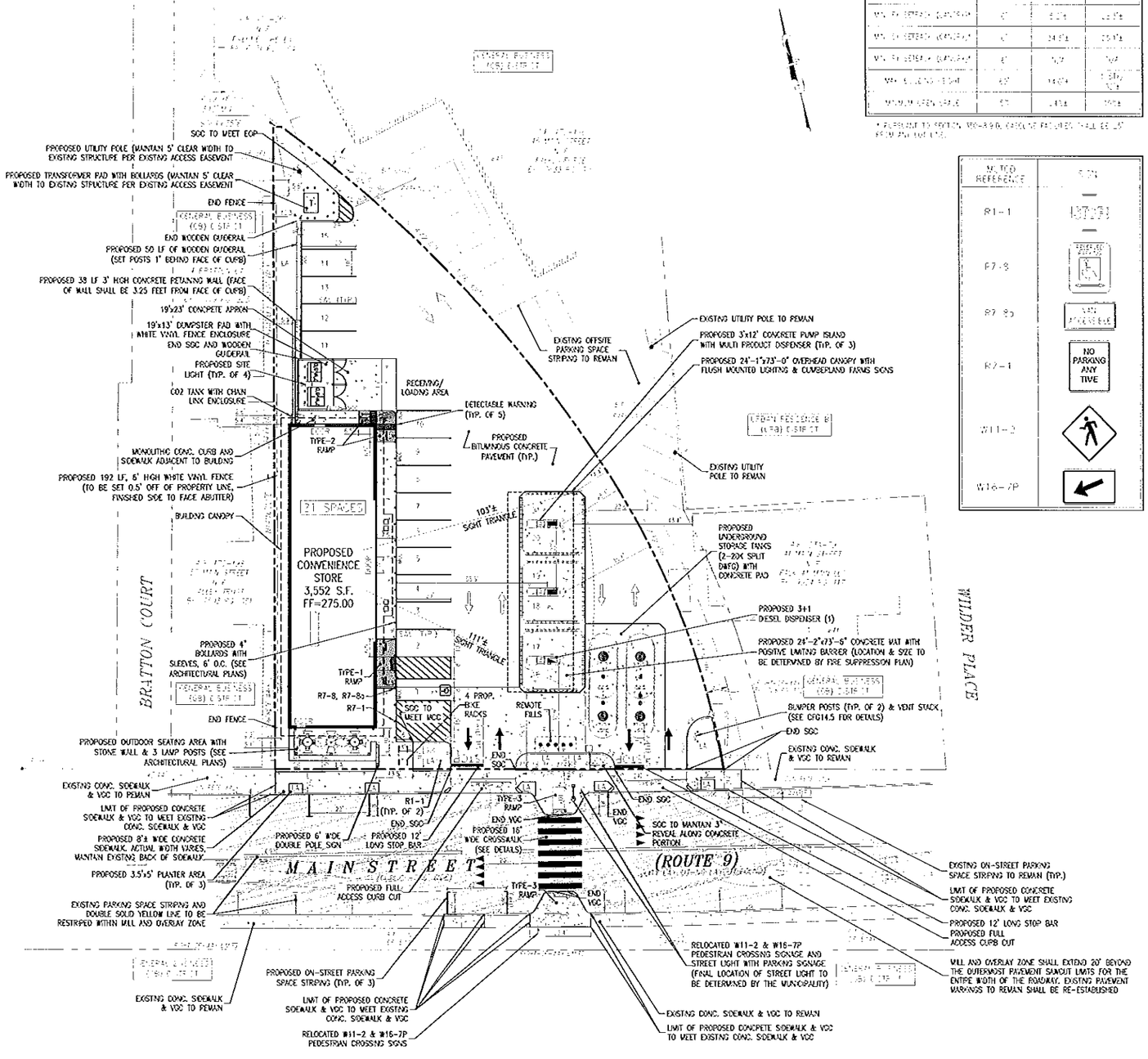

MUTCD REFERENCE	SIGN
R1-1	[illegible]
R7-8	[illegible]
R7-8a	[illegible]
R7-1	NO PARKING ANY TIME
W11-2	[illegible]
W16-7P	[illegible]

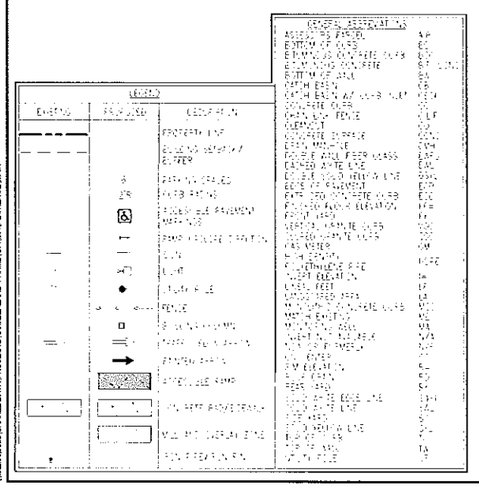

NOT FOR CONSTRUCTION

REVISIONS

NO.	DATE	COMMENT
1	[illegible]	[illegible]
2	[illegible]	[illegible]
3	[illegible]	[illegible]
4	[illegible]	[illegible]
5	[illegible]	[illegible]
6	[illegible]	[illegible]

SCALE

0 5 10 20 40

GRAPHIC SCALE IN FEET

PREPARED BY: RJB

CHECK BY: PRH

SEAL

PHILIP R. HENRY, P.E.

PREPARED FOR

Cumberland FARMS

100 CROSSING BOULEVARD
FRAMINGHAM, MA 01702

PROJECT

53 & 55 MAIN STREET (RT. 9)
FLORENCE, MA 01062

RAZE & REBUILD, ADD LAND
STORE # 0129, VSH # V0389,
ORACLE # MA 0389

PREPARED BY

CIVIL DESIGN GROUP, LLC

21 HIGH STREET, SUITE 207
NORTH ANDOVER, MA 01845
www.cdgengineering.com
p: 978-794-5400 f: 978-965-3971

SHEET

SITE PLAN

CFG04.0

CDG PROJECT #: [illegible]

DATE: [illegible]

\\192.168.50.10\SHARED\DATA\PROJECTS\CUMBERLAND FARMS\OFFMAIR_FLORENCE\MAIN

UTILITY NOTES

1. [illegible]
2. [illegible]
3. [illegible]
4. [illegible]
5. [illegible]
6. [illegible]
7. [illegible]
8. [illegible]
9. [illegible]
10. [illegible]
11. [illegible]
12. [illegible]

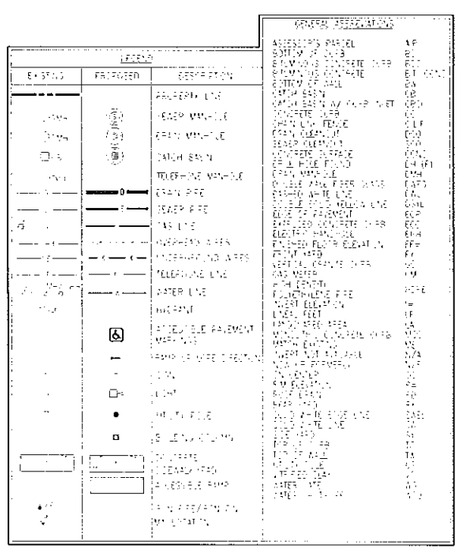

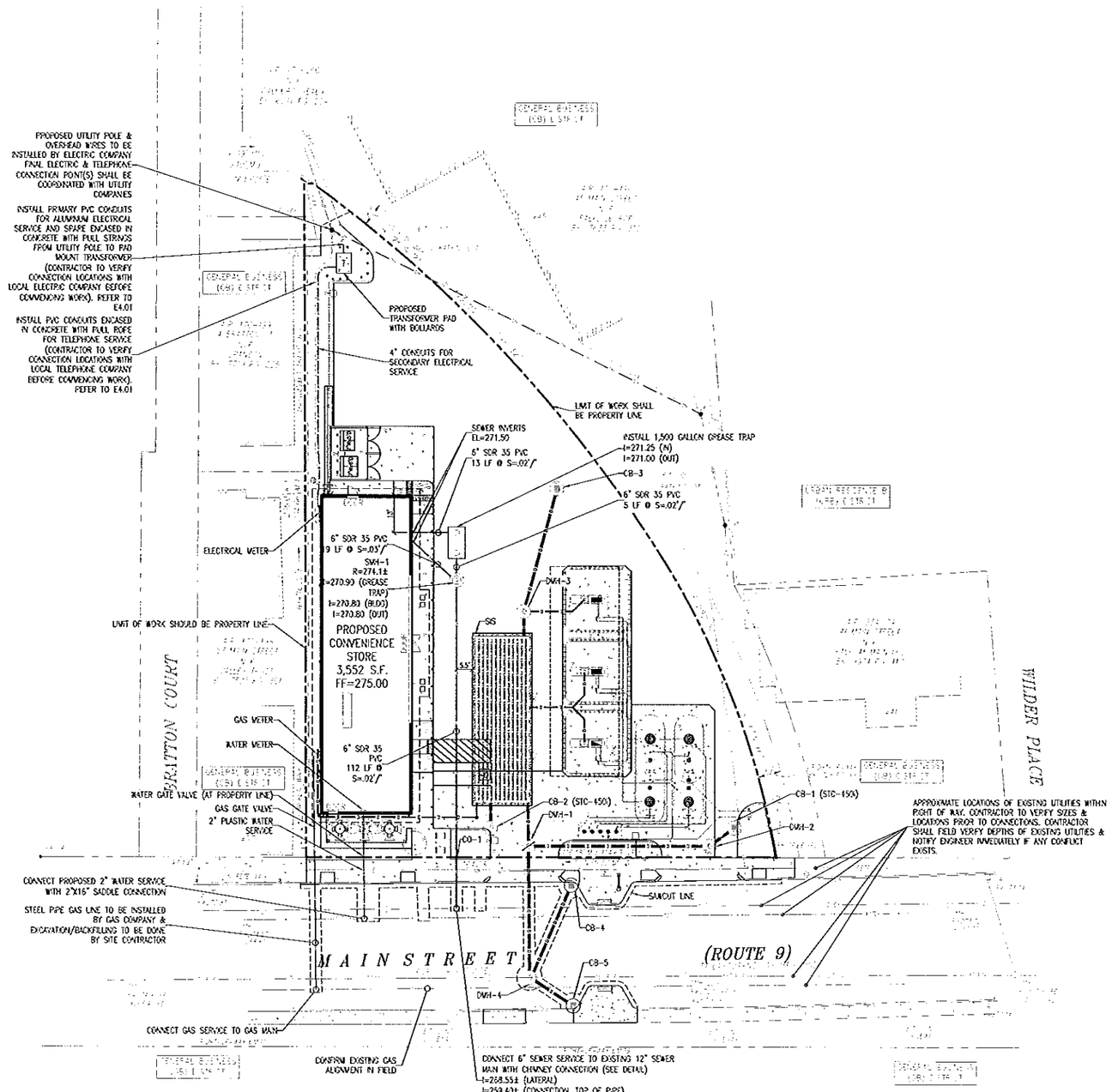

NOT FOR CONSTRUCTION

REVISIONS

REV	DATE	COMMENT
1	[illegible]	[illegible]
2	[illegible]	[illegible]
3		
4		
5		
6		

SCALE

GRAPHIC SCALE IN FEET

DESIGNED BY: [illegible]

CHECK BY: [illegible]

SEAL

PHILIP R. HENRY, P.E.

PREPARED FOR

Cumberland FARMS
100 CROSSING BOULEVARD
FRAMINGHAM, MA 01702

PROJECT

53 & 55 MAIN STREET (RT. 9)
FLORENCE, MA 01062

RAZE & REBUILD, ADD LAND STORE # 0129, VSH # V0389, ORACLE # MA 0389

PREPARED BY

CIVIL DESIGN GROUP, LLC

21 HIGH STREET, SUITE 207
NORTH ANDOVER, MA 01845
www.cdgengineering.com
p: 978-794-5400 f: 978-965-3971

SHEET

UTILITY PLAN

CFG07.0

CDG PROJECT NO. [illegible]

DATE: [illegible]

FUEL GUIDELINES

CSI - 20,000 (12/8 SPLIT) GALLON TANKS (7 DISPENSERS OR LESS)

Cumberland FARMS

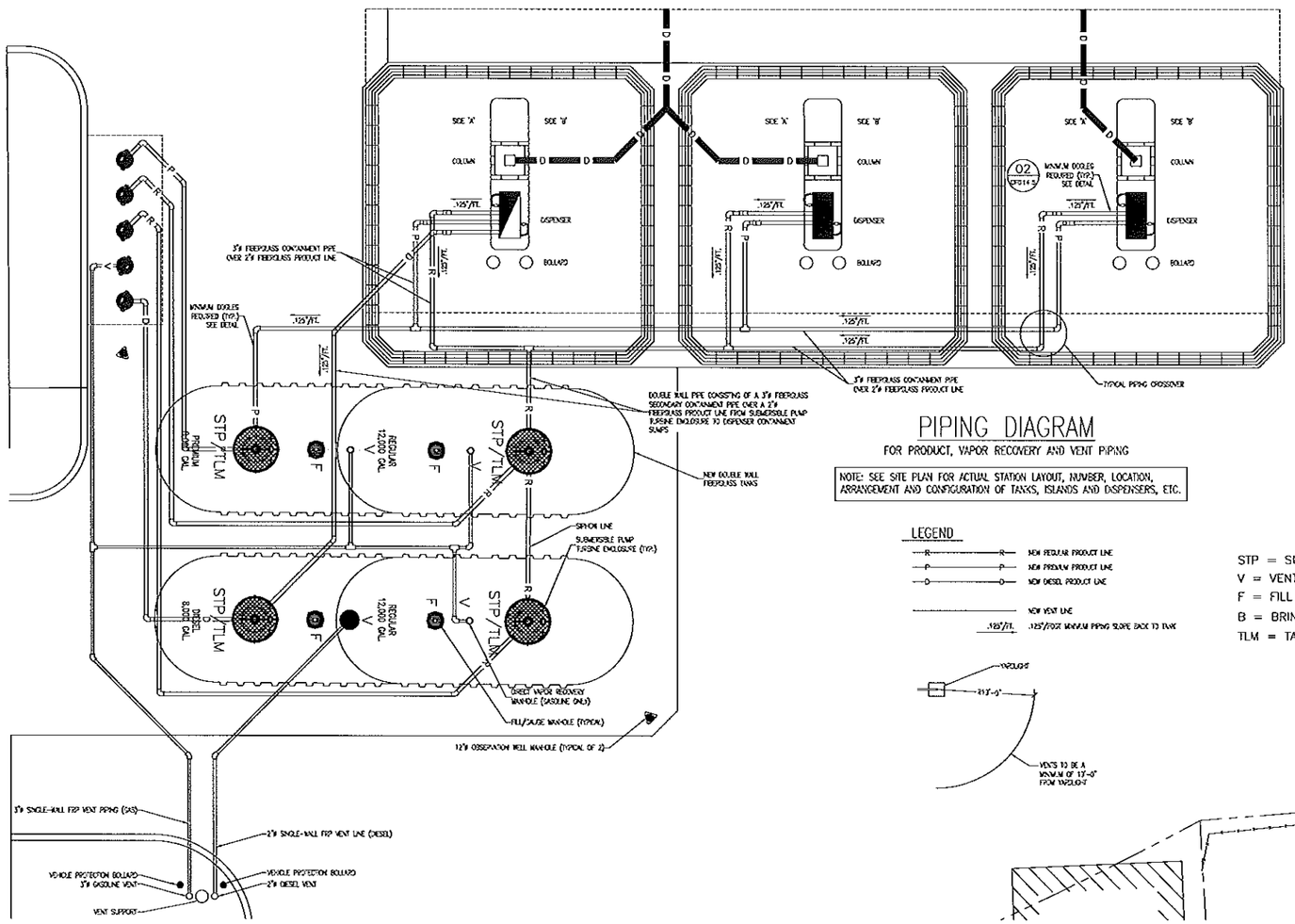

01 CFG14.0 TYPICAL TANK & PIPING LAYOUT – IN LINE OPTION

SCALE: N.T.S.

PIPING DIAGRAM

FOR PRODUCT, VAPOR RECOVERY AND VENT PIPING

NOTE: SEE SITE PLAN FOR ACTUAL STATION LAYOUT, NUMBER, LOCATION, ARRANGEMENT AND CONFIGURATION OF TANKS, ISLANDS AND DISPENSERS, ETC.

LEGEND

- NEW REGULAR PRODUCT LINE
- NEW PREMIUM PRODUCT LINE
- NEW DIESEL PRODUCT LINE
- NEW VENT LINE
- .125"/FT. .125"/FOOT MINIMUM PIPING SLOPE BACK TO TANK

STP = SUBMERGED TURBINE PUMP
V = VENT EXTRACTOR
F = FILL
B = BRINE RESERVOIR
TLM = TANK LEVEL MONITOR

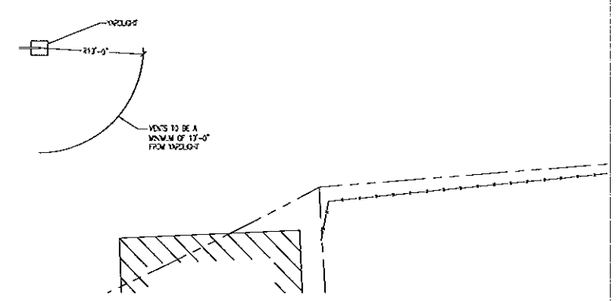

SHEET INDEX	DWG. NO
UST COVER SHEET	CFG14.0
MATERIAL LIST	CFG14.1
TANK INSTALLATION DETAILS	CFG14.2
TANK INSTALLATION DETAILS	CFG14.3
SUMP & PIPING DETAILS	CFG14.4
TANK INSTALLATION DETAILS	CFG14.5
TANK INSTALLATION DETAILS	CFG14.6
REMOTE FILL DETAILS	CFG14.7

GENERAL UST SYSTEM NOTES:

1. THE UNDERGROUND STORAGE SYSTEM WILL BE TESTED BY THE CERTIFIED TANK INSTALLER PRIOR TO BACKFILLING AS FOLLOWS:

A. PRODUCT PIPING (NON-RED THREAD LA)
THE FOLLOWING TESTS SHALL BE CERTIFIED BY THE INSTALLER PRIOR TO BACKFILLING AND COPIES OF THE RESULTS SHALL BE PROVIDED TO THE OWNER AT THE TIME OF BACKFILL INSPECTION.

PRIMARY LINE:
VISUALLY INSPECT ALL JOINTS FOR PROPER INSERTION AND ADHESIVE CURE PRIOR TO PRESSURIZING THE SYSTEM. A GAP BETWEEN THE ADHESIVE BEAD AND THE FITTING SHOULDER INDICATES THAT THE POSSIBILITY OF JOINT FAILURE EXISTS. MAKE ANY NECESSARY REPAIRS BEFORE PRESSURIZING THE PIPING SYSTEM. CHECK THE INTEGRITY OF THE JOINTS BY PRESSURIZING THE SYSTEM TO 25 PSIG AND HOLDING THE PRESSURE FOR A MINIMUM OF ONE MINUTE. SOAP ALL JOINTS TO TEST FOR LEAKS. IF THERE ARE NO LEAKS, RAISE THE LINE PRESSURE IN THE SYSTEM TO A MAXIMUM OF 50 PSIG. AGAIN, HOLD THE PRESSURE FOR AT LEAST ONE MINUTE AND SOAP ALL JOINTS TO CHECK FOR LEAKS. AFTER THE PIPING HAS PASSED THE 50 PSIG PRESSURE TEST, REDUCE THE PRESSURE TO 25 PSIG AND MAINTAIN UNTIL ALL PIPING HAS BEEN COMPLETED.

SECONDARY LINE:
PERFORM AN AIR TEST AT 10 PSIG AND MAINTAIN THE PRESSURE FOR A MINIMUM PERIOD OF ONE HOUR, OR LONG ENOUGH TO SOAP ALL JOINTS, BEFORE BACKFILL. THE CONTRACTOR SHALL MAINTAIN THE REQUIRED PRESSURE FOR A MINIMUM OF 2 HOURS AFTER THE BACKFILL PROCESS HAS BEEN COMPLETED. THE RESULTS OF THIS POST BACKFILL TEST SHALL BE CERTIFIED BY THE INSTALLER AND RESULTS SHALL BE PROVIDED TO THE OWNER WITHIN 30 DAYS OF THE TEST.

B. TANKS
EACH NEW TANK SHALL BE PRESSION TIGHTNESS TESTED BY A QUALIFIED TECHNICIAN IN ACCORDANCE WITH THE STATE REGULATIONS.

C. VENT PIPING
THE FOLLOWING TEST SHALL BE CERTIFIED BY THE INSTALLER PRIOR TO BACKFILLING AND COPIES OF THE RESULTS SHALL BE PROVIDED TO THE OWNER AT THE TIME OF BACKFILL INSPECTION.

– PERFORM AN AIR TEST AT 10 PSIG AND MAINTAIN THE PRESSURE FOR A MINIMUM PERIOD OF 10 MINUTES BEFORE BACKFILL.

WARNING: DO NOT AIR TEST LINES THAT HAVE CONTAINED HAZARDOUS, FLAMMABLE, OR COMBUSTIBLE LIQUIDS OR VAPORS UNLESS THEY ARE PURGED AND MADE SAFE BEFOREHAND. IF PURGING IS NOT FEASIBLE, AN INERT GAS SUCH AS NITROGEN OR HELIUM MAY BE USED TO PRESSURIZE THE PIPING.

D. DISPENSER SUMPS AND TANK SUMPS
THE FOLLOWING TEST SHALL BE CERTIFIED BY THE INSTALLER PRIOR TO BACKFILLING AND COPIES OF THE RESULTS SHALL BE PROVIDED TO THE OWNER AT THE TIME OF BACKFILL INSPECTION.

NEW TANK SUMPS:
THE CERTIFIED TANK INSTALLER SHALL TEST THE NEW TANK SUMP FOR TIGHTNESS IN ACCORDANCE WITH CONTAINMENT SOLUTIONS HYDROSTATIC TESTING REQUIREMENTS, AS FOLLOWS:
- FILL TURBINE ENCLOSURE WITH WATER AT LEAST 3" ABOVE JOINT SEAL. (NOTE: SEALED AND WATERTIGHT TURBINE ENCLOSURES WILL HAVE TWO (2) JOINT SEALS.
- RECORD THE LIQUID LEVEL.
- WAIT 24 HOURS.
- REMEASURE AND RECORD THE LIQUID LEVEL. A LIQUID CHANGE MORE THAN 1/4" INDICATES A POSSIBLE LEAK.

NEW DISPENSER SUMPS:
THE CERTIFIED TANK INSTALLER SHALL TEST THE NEW DISPENSER SUMPS FOR TIGHTNESS, AS FOLLOWS:

A. TO TEST FIELD INSTALLED FITTINGS, ADD ENOUGH BACKFILL UNDER THE UDC BOX SO ITS WEIGHT IS COMPLETELY SUPPORTED. DO NOT ALLOW ISLAND SUPPORTS TO HOLD ALL THE WEIGHT. THE BOX WILL BECOME EXTREMELY HEAVY.

B. FILL THE BOX WITH WATER TO 2 INCHES ABOVE THE HIGHEST FITTING. AFTER 3 HOURS, MAKE A VISUAL INSPECTION OF THE EXTERIOR OF THE BOX. IF THERE ARE NO LEAKS, PROCEED TO REMOVE THE WATER WITH AN APPROPRIATE PUMP. DO NOT DRILL A DRAIN HOLE, AND PLAN TO PATCH THE HOLE.

E. SPILL CONTAINMENT EQUIPMENT

THE FOLLOWING TEST SHALL BE CERTIFIED BY THE INSTALLER AND RESULTS SHALL BE PROVIDED TO THE OWNER AT THE TIME OF BACKFILL INSPECTION.

FILLS & STAGE I – 5 GALLON EMCO WHEATON SPILL CONTAINERS:– EVR CERTIFIED(EMCO WHEATON A1304EVR/A1305 – REMOTE)

EMCO WHEATON DOUBLE SPILL CONTAINMENT MANHOLES ARE VACUUM TESTED, BOTH PRIMARY AND SECONDARY, PRIOR TO SHIPMENT. TO ENSURE THAT NO DAMAGE HAS INCURRED DURING SHIPMENT OR INSTALLATION, THE FOLLOWING TEST IS A QUICK, ON-SITE MST-100 TO VERIFY THE INTEGRITY OF THE PRIMARY AND SECONDARY CONTAINMENTS.

SECONDARY INTEGRITY TEST
E1. REMOVE THE DIPSTICK OR GAUGE FROM THE INSPECTION PORT AND INSTALL THE TEST ADAPTER P/N 434343 (INCLUDED WITH THE VACUUM APPARATUS).
E2. ATTACH AIR PRESSURE SOURCE TO AIR PRESSURE REGULATOR ON VACUUM APPARATUS.
E3. SLOWLY APPLY VACUUM OF 33" WATER COLUMN TO THE INTERSTITIAL SPACE, BY MOVING THE TOGGLE SWITCH. WAIT 30 SECONDS. REAPPLY 33" WATER COLUMN.
E4. ENSURE SWITCH IS IN OFF (CENTER) POSITION, START TIMER AND RECORD REMAINING VACUUM AFTER 1 MINUTE.
E5. IF THE REMAINING VACUUM AFTER 1 MINUTE IS 25" WATER COLUMN (1.8" MERCURY) OR GREATER, BOTH THE PRIMARY AND THE SECONDARY CONTAINMENT VESSELS ARE TIGHT.
E6. IF THE TEST FAILS, ALLOW THE BELLOWS TO EQUALIZE FOR ONE MINUTE AND REPEAT TEST, STARTING AT STEP 3.
E7. IF TEST FAILS A SECOND TIME, REFER TO EMCO WHEATON REPAIR TEST PROCEDURES TP-150 AND TP-151.
E8. REPLACE COMPONENTS OR REPAIR AS NECESSARY.
E9. REINSTALL DIPSTICK (OR PUSH BUTTON TEST PORT ASSEMBLY, IF DW SENSOR MODEL).

F. OVERFILL PREVENTION VALVE – EVR CERTIFIED (EMCO WHEATON A1100EVR GUARDIAN)

F1. ONCE THE SEAL-ALL SEALANT HAS CURED FOR A MINIMUM OF 24 HOURS AND BEFORE INSTALLING THE A1100EVR OVERFILL PREVENTION VALVE INTO THE UNDERGROUND STORAGE TANK, A LEAK TIGHTNESS INTEGRITY TEST MUST BE PERFORMED.
F2. BEGIN BY SEALING BOTH ENDS OF THE A1100EVR OVERFILL PREVENTION VALVE WITH INFLATABLE PLUNGER'S PLUGS. APPLY A MAXIMUM PRESSURE OF 2 INCHES OF WATER COLUMN. SHOULD THE LEAK RATE EXCEED THE ALLOWABLE LIMIT OF 0.17 CFH, LOCATE THE LEAK POINT BY SPRAYING SOAP SOLUTION ALONG THE OUTSIDE OF THE A1100EVR OVERFILL PREVENTION VALVE.
F3. DO NOT EXCEED THE MAXIMUM PRESSURE OF 2 INCHES OF WATER COLUMN. THIS WILL DAMAGE THE A1100 OVERFILL PREVENTION VALVE AND RESULT IN VOIDING THE WARRANTY.

2. THE CONTRACTOR SHALL CALL DIGSAFE AT 811 AT LEAST 72 HOURS PRIOR TO ANY EXCAVATION.

3. ALL CONSTRUCTION AND EQUIPMENT MUST CONFORM TO THE APPLICABLE REGULATIONS AND CODES OF THE MUNICIPALITY, STATE, AND THE NFPA.

4. CONTRACTOR SHALL PROVIDE AT LEAST 5 DAYS ADVANCE NOTICE TO THE STATE, THE LOCAL FIRE DEPARTMENT, AND THE ENGINEER TO INSPECT THE INSTALLATION PRIOR TO FINAL BACKFILL.

5. CONTRACTOR TO VERIFY WITH OWNER THE PRODUCT PIPING LAYOUT AS SHOWN ON THIS PLAN PRIOR TO CONSTRUCTION.

6. CONTRACTOR SHALL ADJUST GRADES AS REQUIRED OVER THE TANK MAT TO ENSURE THAT STORMWATER RUNOFF SHEDS AWAY FROM ALL SURFACE MANHOLES.

THESE TYPICAL TANK & PIPING LAYOUTS ARE SHOWN FOR INFORMATIONAL PURPOSES ONLY. THE SITE ENGINEER SHALL REPLACE THESE TYPICAL LAYOUTS WITH A SITE SPECIFIC TANK & PIPING LAYOUT FOR EACH PROJECT. THIS PLAN SHALL ALSO INCLUDE OTHER SITE UTILITIES TO AVOID CONFLICTS WITH FUEL PIPING.

REVISIONS			
NO	DATE	REV. BY.	DESCRIPTION

V# n/a
Store# n/a
Gas Station# n/a

53 & 55 MAIN STREET, FLORENCE, MA

CSI – DOUBLE WALL FIBERGLASS TANK INSTALLATION FOR:
TWO (2) 20,000 (12/8 SPLIT) GALLON TANKS

Cumberland FARMS
CUMBERLAND FARMS, INC.
100 Crossing Boulevard
Framingham, MA 01702

SCALE: AS NOTED
DATE: 07/23/2015
FILE: CFG14.0
DRAWN BY:

UST COVER SHEET

MHF PROJECT NO. 346314 SHEET 1 OF 8

\\SERVER1\SharedData\Projects\Cumberland Farms\OFI\MA\Florence\Main\UST\OFI (2)12-8split_CFG14_0 CSI.dwg 14.0 7/29/16 8:26am Jeff

PARTS LEGEND

SECTION 100 - [illegible]

104 - [illegible] GALLON COMPARTMENTALIZED [illegible] TANK - [illegible]
TANK DIMENSIONS: [illegible] / [illegible] WITH [illegible] WITH [illegible]
105 - [illegible] REAR PLATE
106 - [illegible] COMPARTMENT [illegible] FRONT [illegible] FRAMES
107 - [illegible] BACK [illegible] BY TANK MFG. [illegible]
108 - [illegible] 3/4" CAMWELDED [illegible] W/ [illegible]
109 - [illegible] REPAIR BY TANK MANUFACTURER
110 - 8" [illegible] CONC. PAD W/ 6 X 6 10/10 WIRE REINFORCEMENT (4" [illegible])
108 - #5 REBAR @ 8" O.C.E.W. (TYP.)
109 - PEA GRAVEL BACKFILL AROUND TANKS TO EXTEND 12" BELOW BOTTOM OF TANKS (TYP.) MIN. HALF MIN. FILL OF 1/2" AND MAX. DIA. OF 3/4" (REF. CONTAINMENT SOLUTIONS BULLETIN)
110 - 12" [illegible] COMPRESSIBLE FOAM BOARD (TYP.)
111 - 4" SCHEDULE PVC PIPE OBSERVATION WELL CAP EACH OBSERVATION WELL C/W CLOSING GROMMET (TYP. MINIMUM OF 2 WELLS TO BE INSTALLED (OPPOSITE CORNERS))

SECTION 200 - [illegible] & BULKHEADS

201 - RIVERSIDE STEEL 3/4" X 12" X 96" STAINLESS STEEL [illegible] FRAME W/8" [illegible] FOOTINGS
202 - 1983-403656 UNIVERSAL 4"OD DIA X 36"W X FACTH U-SHAPED PIPE BULKHEAD

SECTION 300 - TANK TOP EQUIPMENT

301 - 65-8912 AC INVERSAL 8" ROUND UNITED ACCESS MONITOR WELL MANHOLE
302 - A9716-0180 EMCO WHEATON 18" COMPOSITE CAM-LOCK MANHOLE W/ 12" SKIRT
303 - A9716-0440 EMCO WHEATON 44" COMPOSITE MANHOLE, 10" SKIRT, CAMLOCK, COMPOSITE COVERS TO BE SUPPLIED WITH FACTORY COLORED FINISH AS FOLLOWS:
WHITE "REGULAR" = A9716-0440-R
RED "FREEVENT" = A9716-0440-U
YELLOW "ULTRA LOW SULFUR DIESEL" = A9716-0440-D
ORANGE "VAPOR" = A9716-0440-V
BRONZE "E85 ETHANOL" = A9716-0440-E
304 - N/A
305 - N/A
306 - A1034EVR-3170 EMCO WHEATON 6 GALLON DOUBLE WALL, NPT, NO DRAIN, CAST IRON COVER MANHOLE PHASE I EVR APPROVED, CAST IRON COVERS TO BE SUPPLIED WITH FACTORY PAINTED COLOR FINISH AS FOLLOWS:
WHITE "REGULAR" = A1034EVR-3170-R
RED "FREEVENT" = A1034EVR-3170-U
YELLOW "ULTRA LOW SULFUR DIESEL" = A1034EVR-3170-D
ORANGE "VAPOR" = A1034EVR-3170-V
BRONZE "E85 ETHANOL" = A1034EVR-3170-E
ORANGE/BRONZE "E85 VAPOR" = A1034EVR-3170-EV
307 - TANK FUEL ID TAG FASTENED TO FILL PIPE BINDER WITH CLAMP-MASTER REGULAR (CM1-F-1)
308 - N/A
309 - FSV5123223 HOSE MASTER FIBERGLASS FLEX 2" X 12" BRAIDED STAINLESS STEEL FLEX CONNECTOR COUPLED VALVE X VALVE SWIVEL
310 - 7/338 X 59 F.M. ACEE 3/8" X 59" COPPER TUBING
311 - A1102EVR-0?? EMCO WHEATON GUARDIAN 2" 2-POINT CAMB APPROVED ENHANCED OVERFILL PREVENTION VALVE, PHASE I EVR APPROVED W/38" EXTENDED LENGTH UPPER TUBE AND 104" EXTENDED LENGTH LOWER TUBE
312 - 512-440-05 EBW 1.5" DOUBLE POPPET VALVE TOP EMERGENCY SHEAR VALVE (REPLACES 652-440-06)
313 - 40039-1245 EMCO WHEATON 4" BRASS SWIVEL FILL ADAPTER
314 - 6347T-7055-EVR OPW 4" ENHANCED TOP SEAL FUEL CAP
315 - 40079-1245 EMCO WHEATON 4" BRASS VAPOR SWIVEL ADAPTER
316 - 1711T-7087-EVR OPW 3" ENHANCED VAPOR RECOVERY VAPOR TOP SEAL CAP
317 - 233-4420 OPW 4" X 2" EXTRACTOR FITTING W/O CAGE
318 - 233-4430 OPW 4" X 3" EXTRACTOR FITTING W/O CAGE
319 - A1034EVR-2165J EMCO WHEATON 16 GALLON DOUBLE WALL NPT, NO DRAIN W/ LOCKS, CAST IRON COVER SPILL CONTAINER PHASE I EVR APPROVED (NE & VT ONLY) CAST IRON COVERS TO BE SUPPLIED WITH FACTORY PAINTED COLOR FINISH AS FOLLOWS:
WHITE "REGULAR" = A1034EVR-2165J-R
RED "FREEVENT" = A1034EVR-2165J-U
YELLOW "ULTRA LOW SULFUR DIESEL" = A1034EVR-2165J-D
ORANGE "VAPOR" = A1034EVR-2165J-V
BRONZE "E85 ETHANOL" = A1034EVR-2165J-E
ORANGE/BRONZE "E85 VAPOR" = A1034EVR-2165J-EV
320 - 0?8?95 HUSKY 2" EVR PRESSURE VAC VENT W/2.5" TO 6" WATER COLUMN PRESSURE/6" TO 10" WATER COLUMN VACUUM (RED/RED) OPW 3" THREAD ON ADAPTER 5874-1003
321 - 23-0332 OPW 2" ALUMINUM TANK VENT ATMOSPHERIC
322 - 156-7055 OPW 4" (SUPATOP) FILL CAP
323 - 0?0?38 X 0?0?0? EMCO WHEATON 3/8" [illegible] X 1/4" MALE NPT BRASS FITTING
324 - [illegible] FASTON METALS 2" BALL VALVE
325 - A1035-5175-F EMCO WHEATON 5 GALLON REMOTE FILL DOUBLE WALL GRADE 304, NO DRAIN, CAST IRON COVER MANHOLE 35 GALL CONTAINER CAST IRON COVERS TO BE SUPPLIED WITH FACTORY PAINTED COLOR FINISH AS FOLLOWS:
WHITE "REGULAR" = A1035-5175-R
RED "FREEVENT" = A1035-5175-U
YELLOW "ULTRA LOW SULFUR DIESEL" = A1035-5175-D
ORANGE "VAPOR" = A1035-5175-V
BRONZE "E85 ETHANOL" = A1035-5175-E
ORANGE/BRONZE "E85 VAPOR" = A1035-5175-EV
326 - A1071-[illegible] EMCO WHEATON REMOTE FILL [illegible] WALL [illegible] NPT
327 - 40073-[illegible] EMCO WHEATON [illegible] TANK [illegible]
328 - A1031-[illegible] EMCO WHEATON [illegible] BRASS [illegible]
329 - [illegible] EMCO WHEATON [illegible] PHASE I EVR APPROVED
330 - 1071[illegible] EMCO WHEATON [illegible] FILL CAP
331 - [illegible] MASTER BRUSHER [illegible] TOUCHUP [illegible]

SECTION 400 - VEEDER ROOT EQUIPMENT

401 - [illegible] VEEDER ROOT EMULTIWATCH [illegible] W/ 1" [illegible] PIPE & [illegible] TANK
402 - [illegible] VEEDER ROOT [illegible]
403 - [illegible] VEEDER ROOT [illegible] PRESSURE INTERFACE MODULE
404 - [illegible] VEEDER ROOT [illegible] / [illegible] SENSOR INTERFACE MODULE
405 - 394795-009 VEEDER ROOT [illegible] W/ 10' CABLE INSTALLED AT BOTTOM FRONT OF ALL TANKS
406 - 394795-[illegible] VEEDER ROOT DUAL FLOAT HYDROSTATIC SENSOR
407 - [illegible] VEEDER ROOT [illegible] MOUNTING KIT
408 - 847390-[illegible] VEEDER ROOT 10FT [illegible] WITH BLUE FACEPLATE
409 - [illegible] VEEDER ROOT 4" SHAFT PREMANUFACTURED FLOAT KIT W/ 5' CABLE
410 - 847420-001 VEEDER ROOT 4"FPT WITH BLUE FACEPLATE INSTALLATION KIT W/ 5' CABLE AND 4" FLOAT
411 - 330310-[illegible] VEEDER ROOT TLS350R / TLS350 PLUS ETHERNET TCP/IP COMMUNICATION INTERFACE MODULE
412 - 847490-[illegible] VEEDER ROOT INTERFACE MODULE EXPANSION BOARD
413 - CMN-611P02 CMN 18/2 GREY [illegible] CABLE - 1000' REEL (REMANUFACTURED)
414 - 848430 VEEDER ROOT (FILLER) W/O SATCHELS
415 - N/A
416 - 333697-001 VEEDER ROOT 8 CIRCUIT REMOTE LEAK DETECTOR MODULE
417 - 847490-001 VEEDER ROOT INTERFACE MODULE EXPANSION BOARD

SECTION 500 - SUBMERSIBLE PUMPS & COMPONENTS

501 - 4C0324001 FE PETRO STP-V32 W/ 1HP VARIABLE SPEED AND LENGTH SUBMERGED TURBINE PUMP - RANGE 84" - 150"
502 - 401550A0 4" X 15" BLACK NIPPLE - BEAM AND CHAMPER
503 - 5974102009 FE PETRO NEW STYLE MVS VFD VEP 1.22 CONTROLLER - WITH VERSION 1.22 SOFTWARE
504 - 4V0310201 FE PETRO STPR-150-V32-C3 1.5HP FIXED SPEED, FIXED LENGTH SUBMERGED TURBINE PUMP RANGE 91"-150"
505 - N/A
506 - E0C0300100 FE PETRO STP-EH 120 VAC ISOLATION RELAY
507 - 1C0137317 FE PETRO A/G COMPATIBLE SWITCH CHECK VALVE ASSEMBLY
508 - 184-2500MB MCDANIEL BRONZE 4" X 2" X 2" CAST IRON DOUBLE TAP BUSHING
509 - 4V0360201 STPR-V34-V42 FE PETRO 4HP VARIABLE SPEED AND LENGTH SUBMERGED TURBINE PUMP - RANGE 83" - 150"
510 - 2" GALV. PIPE FOR PRESSURE GAUGE

SECTION 600 - ENTRY BOOTS & TEST REDUCERS

601 - B-33-D EMAID 3" DOUBLE FLEX ENTRY BOOT W/COATED STAINLESS STEEL CLAMPS
602 - B-37-D EMAID 3/4" OR 1" DOUBLE ENTRY BOOT W/ COATED STAINLESS STEEL CLAMPS
603 - T94-7020 OEM FLEXWORKS 3" X 2" TEST REDUCE W/ PIN SEPM

SECTION 700 - AO SMITH PIPE & FITTINGS

701 - 010020-009-1 AO SMITH 2" X 15' FIBERGLASS PIPE
702 - 012020-360-4 AO SMITH 2" 90 DEGREE ELBOW
703 - 012020-310-4 AO SMITH 2" 45 DEGREE ELBOW
704 - 012020-131-4 AO SMITH 2" BELL X MALE ADAPTER
705 - 012020-134-4 AO SMITH 2" BELL X FEMALE ADAPTER
706 - 012020-410-4 AO SMITH 2" TEE FIBERGLASS
707 - 012020-101-8 AO SMITH 2" SLEEVE COUPLING
708 - 010030-063-1 AO SMITH 3" X 15' FIBERGLASS PIPE
709 - 012030-360-4 AO SMITH 3" 90 DEGREE ELBOW
710 - 012030-310-4 AO SMITH 3" 45 DEGREE ELBOW
711 - 012030-131-4 AO SMITH 3" BELL X MALE ADAPTER
712 - 012030-134-4 AO SMITH 3" BELL X FEMALE ADAPTER
713 - 012030-410-4 AO SMITH 3" TEE FIBERGLASS
714 - 012030-101-8 AO SMITH 3" SLEEVE COUPLING
715 - 012030-231-4 AO SMITH 3" X 2" REDUCER COUPLING
716 - 012030-410-3 AO SMITH 3" TEE - SECONDARY CONTAINMENT
717 - 104030-101-3 AO SMITH 3" COUPLING - SECONDARY CONTAINMENT
718 - 012030-310-3 AO SMITH 3" 45 DEGREE ELBOW - SECONDARY CONTAINMENT
719 - 012030-360-3 AO SMITH 3" 90 DEGREE ELBOW - SECONDARY CONTAINMENT
720 - 012020-231-4 AO SMITH 2" X 1.5" FEMALE NPT REDUCER BUSHING
721 - [illegible] AMERICAN [illegible] FLEX/FLEX 4" PIPE

SECTION 800 - EMAIL BOXES

[illegible] - [illegible] 4" [illegible] WITH [illegible] BEL PREFABRICATED [illegible] CLAMP 3/4" [illegible] ELECTRIC [illegible] OF FRAME (2) FACTORY INSTALLED FRONT [illegible] VALVE [illegible] FACTORY INSTALLED
802 - 2003-[illegible]-80-CF-13-W EMAIL PROTECTED [illegible] WITH [illegible] PAINTED [illegible] CLAMP W/ WEEP-PROVABLE ELECTRIC OFFSET FRAME, (3) BRASS FACTORY INSTALLED FILL 1" [illegible] VALVE STAINLESS FRAMETS, AND (3) F-50-[illegible] FILL EXTENDED ENTRY FITTING FACTORY INSTALLED
803 - N/A
804 - N/A
805 - N/A
806 - FERGUSON PIPE WATER PIPE [illegible] 1.5" X 12" BRAIDED STAINLESS STEEL FLEX CONNECTOR FACTORY 1.5" MALE X 1.5" MALE STYLE

SECTION 900 - GENERAL

REVISIONS			
NO	DATE	REV. BY.	DESCRIPTION

V# n/a
Store# n/a
Gas Station# n/a

53 & 55 MAIN STREET, FLORENCE, MA

CSI - DOUBLE WALL FIBERGLASS TANK INSTALLATION FOR:
TWO (2) 20,000 (12/8 SPLIT) GALLON TANKS

Cumberland FARMS
CUMBERLAND FARMS, INC.
100 Crossing Boulevard
Framingham, MA 01702

SCALE: AS NOTED
DATE: 07/27/2015
FILE: 09-[illegible]-[illegible]
DRAWN BY:

WATER AS-BUILT

CF014-1

\\SERVER1\SharedData\Projects\Cumberland Farms\CFR\MA\Florence\Main\USTY\CFI (2)12-8split_CFG14_1 CSI.dwg 14:1 7/27/16 10:16am jeff

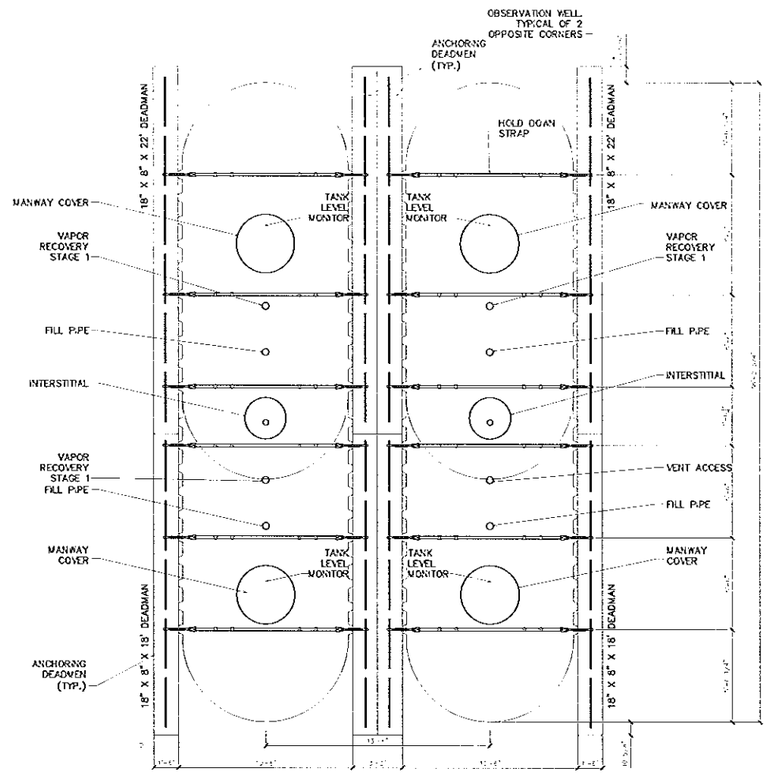

01 CFG14.2 TANK DEADMAN ANCHORING PLAN

SCALE: 1/4" = 1'-0"

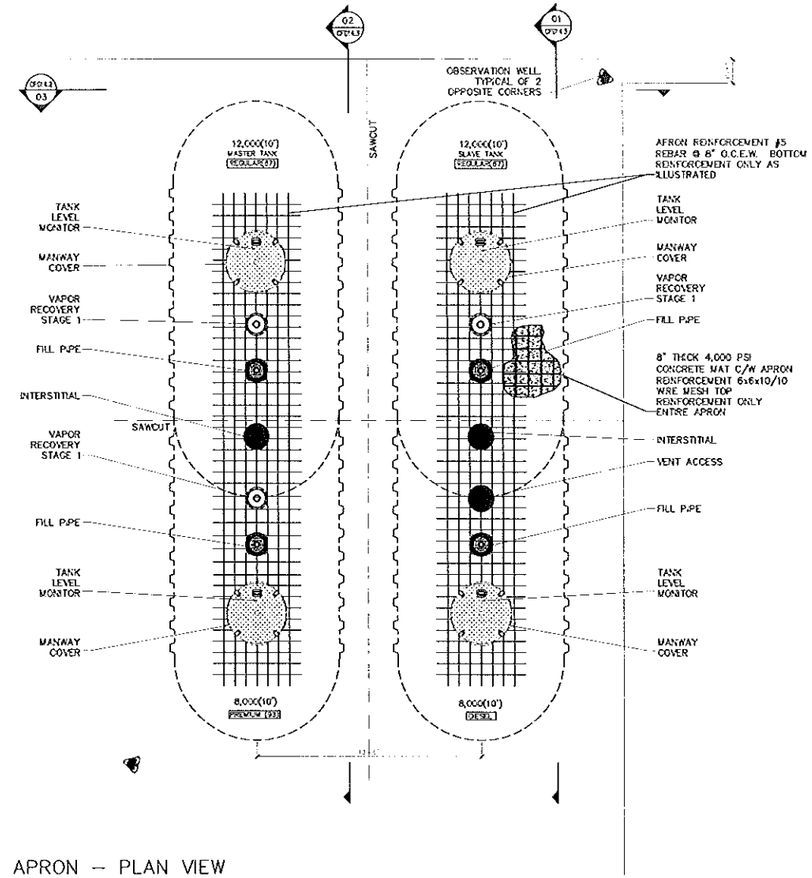

02 CFG14.2 TANK TOP APRON – PLAN VIEW

SCALE: 1/4" = 1'-0"

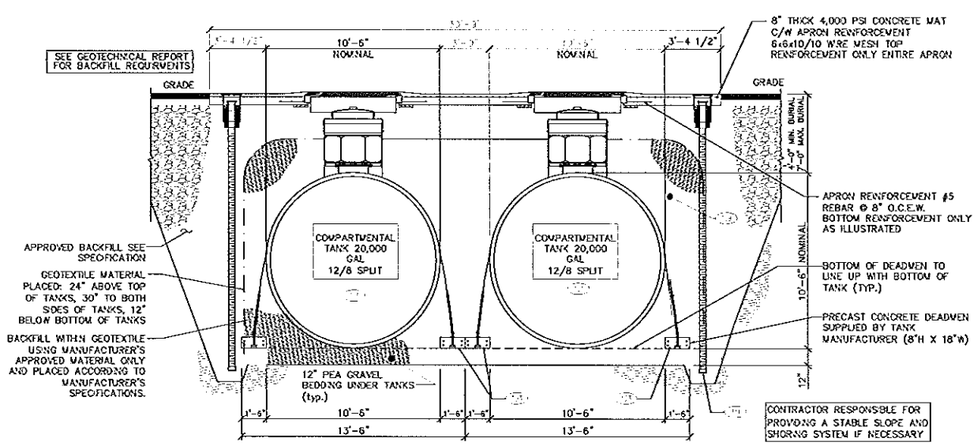

03 CFG14.2 TANK FIELD CROSS SECTION

SCALE: 1/4" = 1'-0"

MANUFACTURER'S APPROVED BACKFILL BETWEEN GEOTEXTILE AND TANKS:

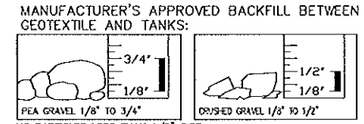

NO PARTICLES LESS THAN 1/8" SIZE
SEE MANUFACTURER'S INSTRUCTIONS FOR ADDITIONAL DETAILS AND COMPACTION SPECIFICATIONS.

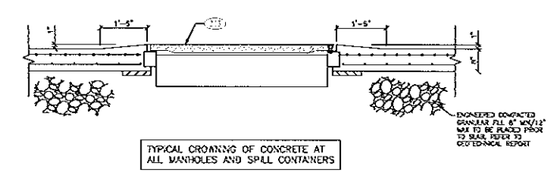

04 CFG14.2 TYPICAL CROWNING DETAIL

SCALE: 3/4" = 1'-0"

REVISIONS			
NO	DATE	REV. BY	DESCRIPTION

V# n/a
Store# n/a
Gas Station# n/a

53 & 55 MAIN STREET, FLORENCE, MA

CSI – DOUBLE WALL FIBERGLASS TANK INSTALLATION FOR:

TWO (2) 20,000 (12/8 SPLIT) GALLON TANKS

Cumberland FARMS

CUMBERLAND FARMS, INC.
100 Crossing Boulevard
Framingham, MA 01702

SCALE: AS NOTED
DATE: 07/27/2015
FILE:on (2)12-8-split_CFG14.2
DRAWN BY:

TANK INSTALLATION DETAILS

CFG14.2

MHF PROJECT NO. 346314 SHEET 3 OF 8

\\SERVER1\SharedData\Projects\Cumberland Farms\CFI\MA\Florence\Main\UST\CFI (2)12-8split_CFG14_2 - side-side CSI.dwg Layout1 7/29/16 8:29am jeff

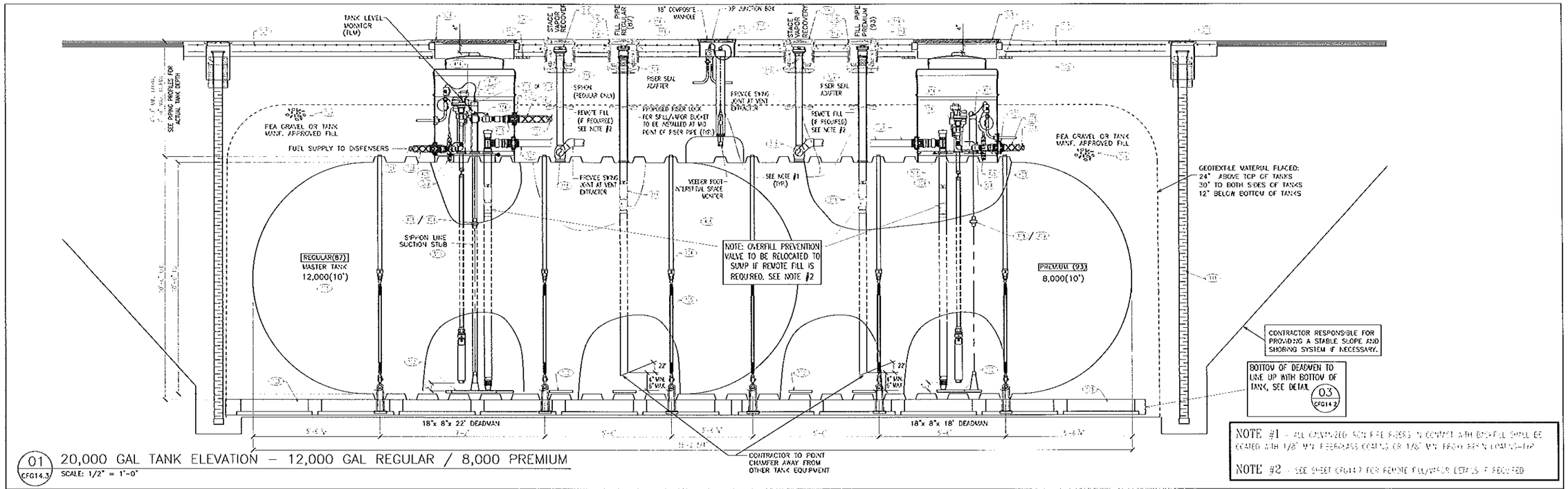

01 CFG14.3 20,000 GAL TANK ELEVATION – 12,000 GAL REGULAR / 8,000 PREMIUM
SCALE: 1/2" = 1'-0"

02 CFG14.3 20,000 GAL TANK ELEVATION – 12,000 GAL REGULAR / 8,000 DIESEL
SCALE: 1/2" = 1'-0"

\\SERVER1\SharedData\Projects\Cumberland Farms\CFI\MA\Florence\Main\UST\CFI (2)12-8split_CFG14_3 CSI.dwg CFG14.3 7/27/16 11:42am jeff

REVISIONS			
NO.	DATE	REV. BY	DESCRIPTION

V# n/a
Store# n/a
Gas Station# n/a

53 & 55 MAIN STREET, FLORENCE, MA

CSI – DOUBLE WALL FIBERGLASS TANK INSTALLATION FOR:
TWO (2) 20,000 (12/8 SPLIT) GALLON TANKS

Cumberland FARMS
CUMBERLAND FARMS, INC.
100 Crossing Boulevard
Framingham, MA 01702

SCALE: AS NOTED
DATE: 07/27/2016
FILE: CFI (2)12-8-split_CFG14.3
DRAWN BY:

TANK INSTALLATION DETAILS

MHF PROJECT NO. 346314 SHEET 4 OF 8

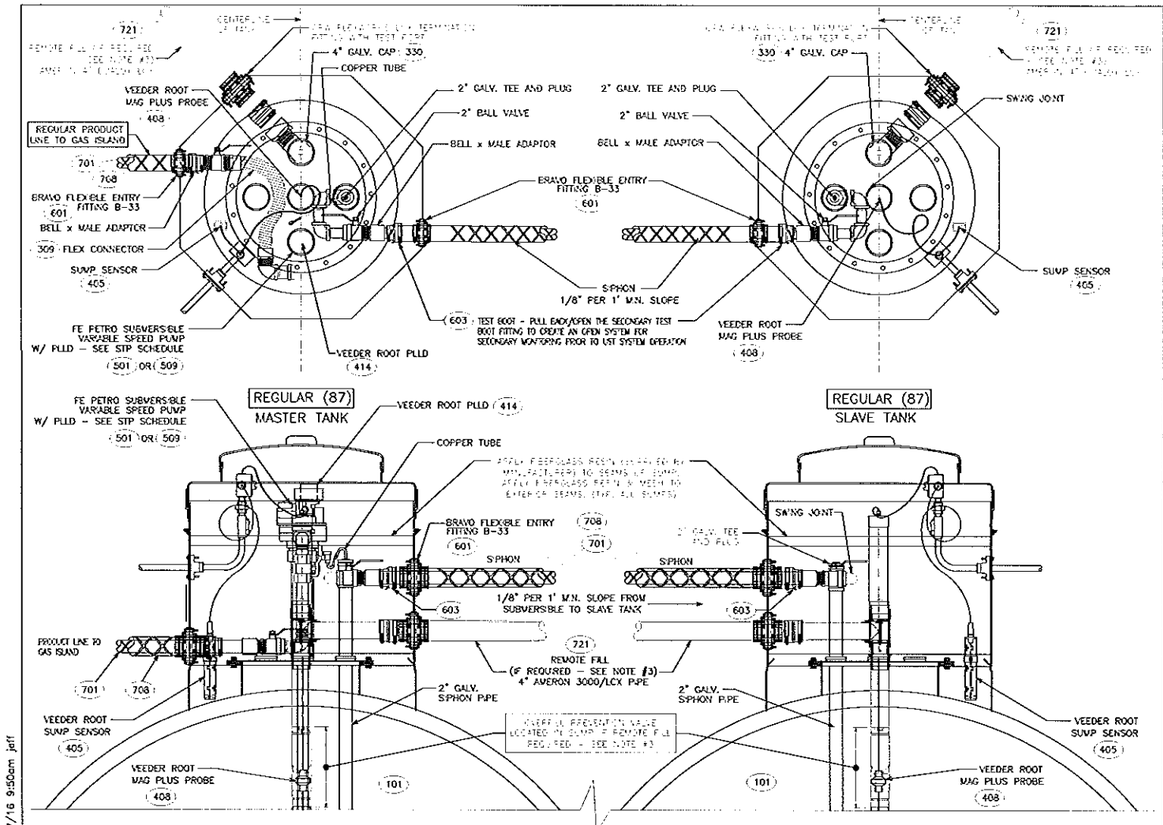

STP SCHEDULE				
# OF REGULARS	# STP'S (REGULAR)	HP VARIABLE SPEED (REGULAR)	# STP'S (PREM / DIESEL)	HP VARIABLE SPEED (PREM / DIESEL)
1 OR LESS	1	1 HP	1	1.5 HP
2 / 3	1	2 HP	1	1.5 HP
4 / 5	1	3 HP	1	1.5 HP
6 OR MORE	2	4 HP	1	1.5 HP

NOTES:
1. LOCATION OF FITTINGS AS SHOWN FOR PRODUCT PIPING, SIPHON BAR AND REMOTE FILLS ARE ILLUSTRATIVE ONLY. SEE SITE SPECIFIC PIPING PLAN FOR ACTUAL PIPING LAYOUT.
3. IF SITE LAYOUT REQUIRES REMOTE FILLS, SEE SHEET CFG14.7 FOR ADDITIONAL REMOTE FILL DETAILS

01 CFG14.4 TYPICAL REGULAR TANK SUMP PLANS
SCALE: 1/2" = 1'-0"

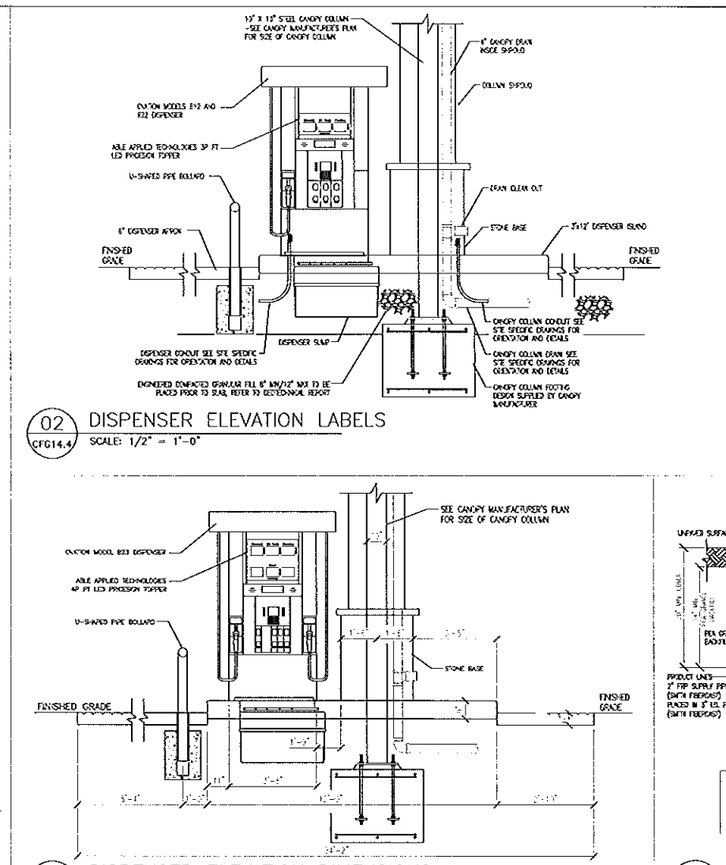

02 CFG14.4 DISPENSER ELEVATION LABELS
SCALE: 1/2" = 1'-0"

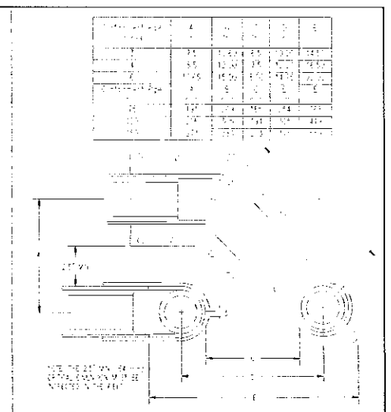

03 CFG14.4 PIPING CROSSOVER DETAIL
NOT TO SCALE

04 CFG14.4 DISPENSER ELEVATION DIMENSIONS
SCALE: N.T.S.

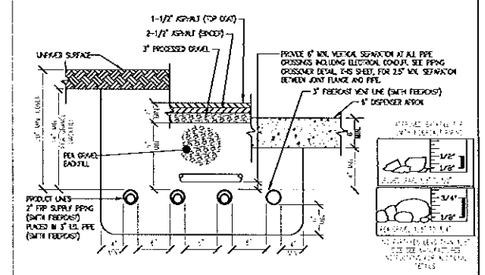

(NOTE: DETAIL INDICATES MINIMUM MANUFACTURER REQUIRED STANDARDS. PLEASE CONSULT WITH CUMBERLAND FARMS FOR SITE SPECIFIC REQUIREMENTS.)

05 CFG14.4 TYPICAL TRENCH DETAILS
SCALE: 1/2" = 1'-0"

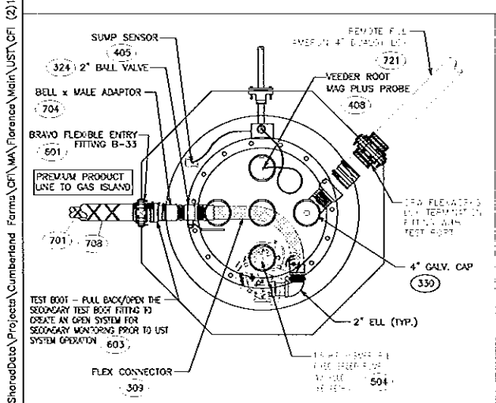

06 CFG14.4 TYPICAL PREMIUM TANK SUMP PLAN
SCALE: 1/2" = 1'-0"

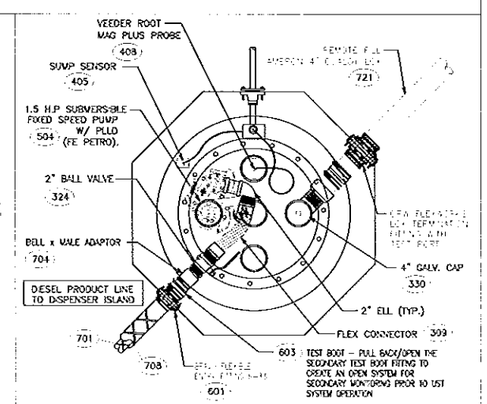

07 CFG14.4 TYPICAL DIESEL TANK SUMP PLAN
SCALE: 1/2" = 1'-0"

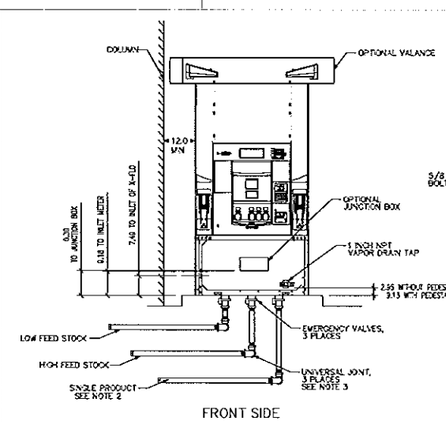

08 CFG14.4 DISPENSER FOOTING DETAIL
NOT TO SCALE

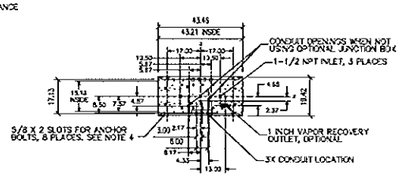

BASE DIMENSIONS

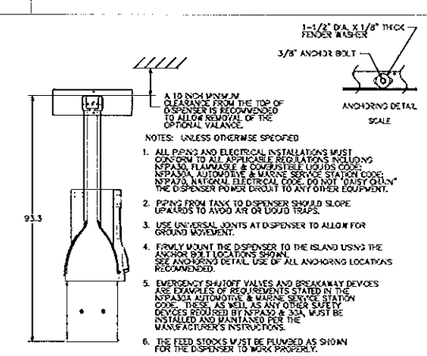

NOTES: UNLESS OTHERWISE SPECIFIED

1. ALL PIPING AND ELECTRICAL INSTALLATIONS MUST CONFORM TO ALL APPLICABLE REGULATIONS INCLUDING NFPA30, FLAMMABLE & COMBUSTIBLE LIQUIDS CODE, NFPA30A, AUTOMOTIVE & MARINE SERVICE STATION CODE, NFPA70, NATIONAL ELECTRICAL CODE. DO NOT "DAISY CHAIN" THE DISPENSER POWER CIRCUIT TO ANY OTHER EQUIPMENT.
2. PIPING FROM TANK TO DISPENSER SHOULD SLOPE UPWARDS TO AVOID AIR OR LIQUID TRAPS.
3. USE UNIVERSAL JOINTS AT DISPENSER TO ALLOW FOR GROUND MOVEMENT.
4. FIRMLY MOUNT THE DISPENSER TO THE ISLAND USING THE ANCHOR BOLT LOCATIONS SHOWN. SEE ANCHORING DETAIL. USE OF ALL ANCHORING LOCATIONS RECOMMENDED.
5. EMERGENCY SHUTOFF VALVES AND BREAKAWAY DEVICES ARE EXAMPLES OF REQUIREMENTS STATED IN THE NFPA30A AUTOMOTIVE & MARINE SERVICE STATION CODE. THESE, AS WELL AS ANY OTHER SAFETY DEVICES REQUIRED BY NFPA30 & 30A, MUST BE INSTALLED AND MAINTAINED PER THE MANUFACTURER'S INSTRUCTIONS.
6. THE FEED STOCKS MUST BE PLUMBED AS SHOWN FOR THE DISPENSER TO WORK PROPERLY.
7. CONNECT OPTIONAL INTERCOM CIRCUIT TO A LISTED CLASS 2 POWERED INTERCOM ONLY WITH 18 GUAGE MINIMUM, AT LEAST 50 VOLTS, 0.5 AMPS & 25 VA. EQUIVALENT OR LISTED. WIRE RUNS BACK TO INTERCOM POWER MUST BE RUN IN SEPARATE DEDICATED LISTED METALLIC CONDUIT.

WAYNE/DRESSER
OVATION B/12/3

REVISIONS			
NO.	DATE	REV. BY	DESCRIPTION

V# n/a
Store# n/a
Gas Station# n/a

53 & 55 MAIN STREET, FLORENCE, MA

CSI – DOUBLE WALL FIBERGLASS TANK INSTALLATION FOR:
TWO (2) 20,000 (12/8 SPLIT) GALLON TANKS

Cumberland FARMS
CUMBERLAND FARMS, INC.
100 Crossing Boulevard
Framingham, MA 01702

SCALE: AS NOTED
DATE: 07/27/2015
FILE: 01 0213-8-qa_07144
DRAWN BY:

SUMP & PIPING DETAILS
CFG14.4

VHF PROJECT NO. 346314 SHEET 5 OF 8

\\SERVER1\SharedData\Projects\Cumberland Farms\CFI\MA\Florence\Main\UST\CFI (2)12-8split_CFG14_4 CSI.dwg CFG14.4 7/27/16 9:50am jeff

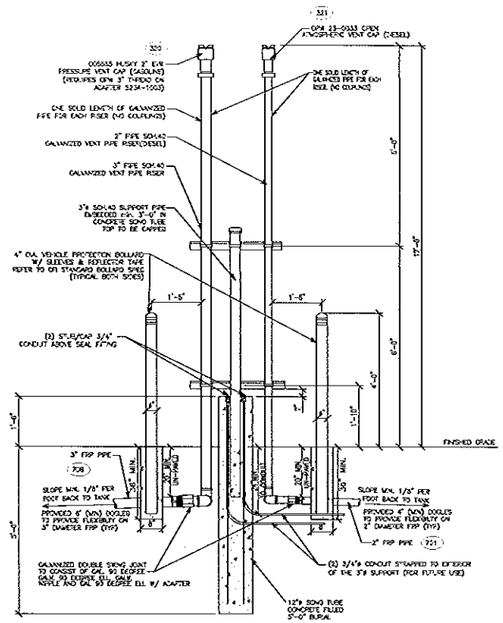

NEW VENT CLUSTER.

NOTE

1) ALL GALVANIZED STEEL PIPE IN CONTACT WITH BACKFILL SHALL BE COATED WITH 1/8" FIBERGLASS COATING, 1/8" EPOXY RESIN.

2) ALL PIPE, SUPPORTS AND HARDWARE TO BE GALVANIZED.

01 CFG14.5 VENT CLUSTER ELEVATION DETAIL

SCALE: 1/2" = 1'-0"

DOG LEG SCHEDULE

FRP DOGLEG TO BE PROVIDED AT EACH CONNECTION TO A FIXED POINT (TANK, DISPENSER, VENT) PER THE FOLLOWING SCHEDULE:

NOMINAL PIPE SIZE	MIN. DOG LEG LENGTH ("X")
2"	45"
3"	60"
4"	65"

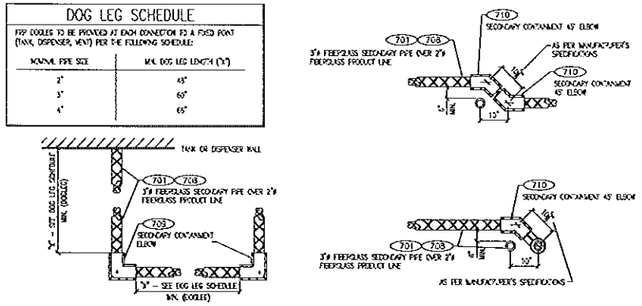

02 CFG14.5 TYPICAL PIPING DOGLEG AND CROSSOVER DETAILS

SCALE: N.T.S.

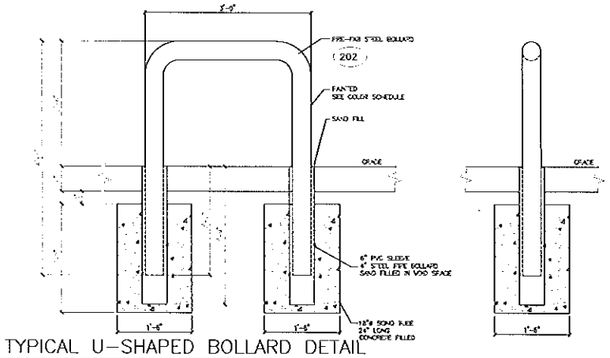

03 CFG14.5 TYPICAL U-SHAPED BOLLARD DETAIL

SCALE: 3/4" = 1'-0"

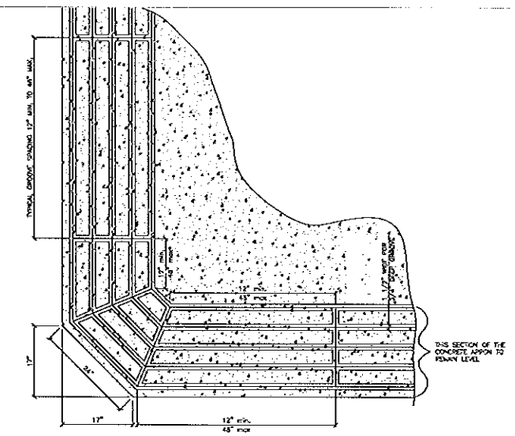

TYPICAL APRON CORNER AND GROOVE SPACING DETAIL

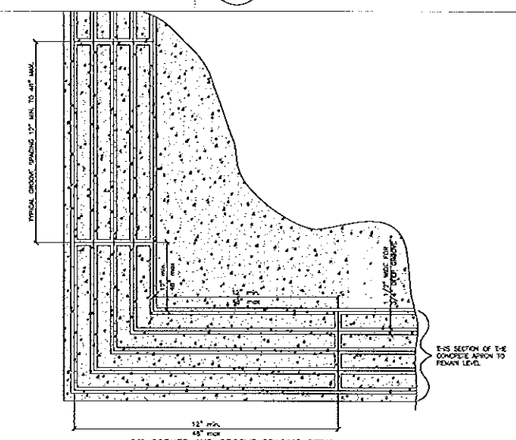

90° CORNER AND GROOVE SPACING DETAIL

NOTE:

1. THE POSITIVE LIMITING BARRIER TO BE 5 CONTINUOUS "V" GROOVES 1 1/2" WIDE x 3/4" DEEP, ON 4 3/4" CENTERS WITH CROSS INTERCONNECTING GROOVES EQUALLY SPACED ON MIN. 12" MAX. 48" CENTERS.
2. "V" GROOVES SHALL BE TROWELLED IN CONCRETE SLAB.
3. "V" GROOVES SHALL BE A CONSTANT WIDTH AND DEPTH FOR THE ENTIRE APRON.
4. GROOVES MUST BE KEPT CLEAN OF DIRT AND DEBRIS.
5. GENERAL CONTRACTOR TO REFER TO THE FIRE SUPPRESSION PLAN FOR PLB PLACEMENT.

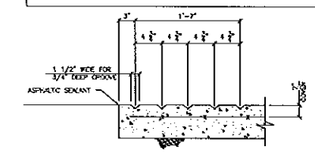

V-GROOVE EDGE OF SLAB SECTION

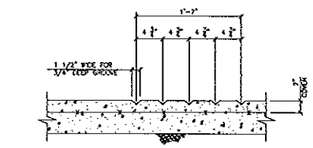

V-GROOVE INNER SLAB SECTION

04 CFG14.5 POSITIVE LIMITING BARRIER DETAILS

SCALE: N.T.S.

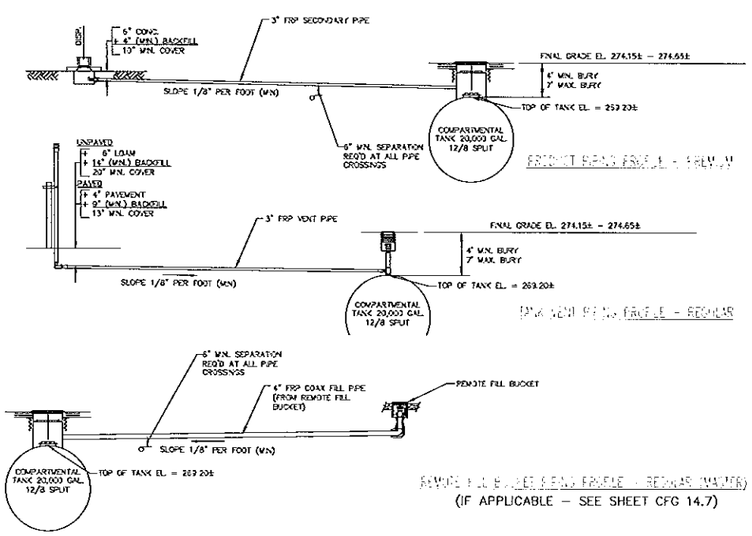

(IF APPLICABLE – SEE SHEET CFG 14.7)

05 CFG14.5 PIPING PROFILES

SCALE: N.T.S.

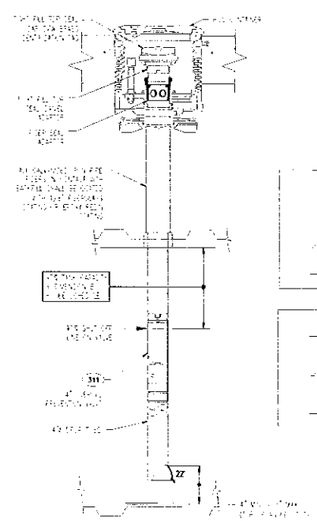

IF SITE LAYOUT REQUIRES REMOTE FILLS, SEE SHEET CFG14.7 FOR OVERFILL PREVENTION VALVE SCHEDULE

OVERFILL PREVENTION VALVE SCHEDULE

TYPE	[illegible]	[illegible]	[illegible]	[illegible]	[illegible]
[illegible]	[illegible]	[illegible]	[illegible]	[illegible]	[illegible]
[illegible]	[illegible]	[illegible]	[illegible]	[illegible]	[illegible]

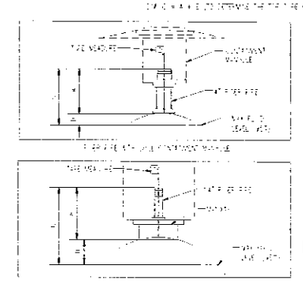

06 CFG14.5 OVERFILL PREVENTION VALVE

SCALE: N.T.S.

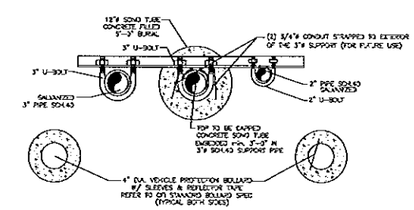

07 CFG14.5 VENT STACK PLAN VIEW

SCALE: 1/2" = 1'-0"

REVISIONS			
NO.	DATE	REV. BY.	DESCRIPTION

V# n/a

Store# n/a

Gas Station# n/a

53 & 55 MAIN STREET, FLORENCE, MA

CSI – DOUBLE WALL FIBERGLASS TANK INSTALLATION FOR:

TWO (2) 20,000 (12/8 SPLIT) GALLON TANKS

Cumberland FARMS

CUMBERLAND FARMS, INC.
100 Crossing Boulevard
Framingham, MA 01702

TANK INSTALLATION DETAILS

SCALE:	AS NOTED
DATE:	07/27/2016
FILE:	09 [illegible]
DRAWN BY:	
	CFG14.5

MHF PROJECT NO. 346314 SHEET 6 OF 8

\\SERVER1\SharedData\Projects\Cumberland Farms\CFI\MA\Florence\Main\UST\CFI (2)12-8split_CFG14.5 CSI.dwg CFG14.5 7/27/16 10:44am jeff

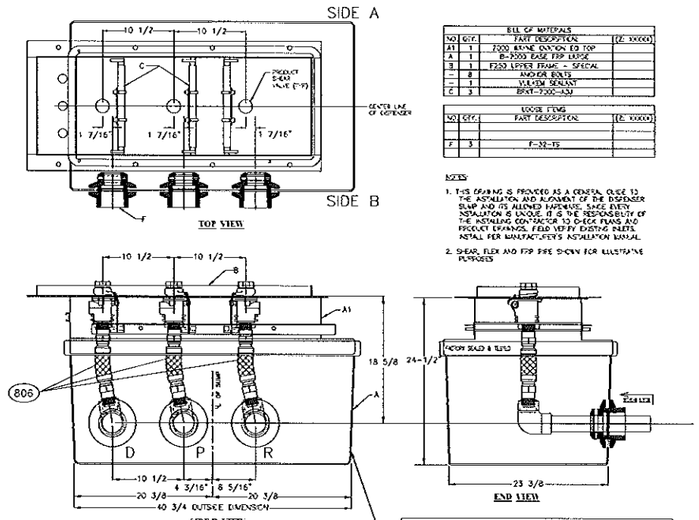

BILL OF MATERIALS			
NO	QTY.	PART DESCRIPTION	(E: XXXXX)
A1	1	7000 ALUME CANOPY EQ TOP	
A	1	B-2000 BASE FRP LOOSE	
B	1	F250 UPPER FRAME - SPECIAL	
–	8	ANCHOR BOLTS	
–	1	VULKEM SEALANT	
C	3	BPXT-7000-AZN	

LOOSE ITEMS			
NO	QTY.	PART DESCRIPTION	(E: XXXXX)
F	3	F-32-TS	

NOTES:

1. THIS DRAWING IS PROVIDED AS A GENERAL GUIDE TO THE INSTALLATION AND ALIGNMENT OF THE DISPENSER SUMP AND ITS ALLIED HARDWARE. SINCE EVERY INSTALLATION IS UNIQUE, IT IS THE RESPONSIBILITY OF THE INSTALLING CONTRACTOR TO CHECK PLANS AND PRODUCT DRAWINGS, FIELD VERIFY EXISTING INLETS, INSTALL PER MANUFACTURER'S INSTALLATION MANUAL.
2. SHEAR, FLEX AND FRP PIPE SHOWN FOR ILLUSTRATIVE PURPOSES

FIBERGLASS DISPENSER SUMP
(3+0)BLENDER = 2 BONDED FITTINGS (801)
(3+1)BLENDER = 3 BONDED FITTINGS (802)
R = REGULAR
P = PREMIUM
D = DIESEL (IF APPLICABLE)

01 CFG14.6 TYPICAL DISPENSER SUMP ELEVATIONS
SCALE: N.T.S.

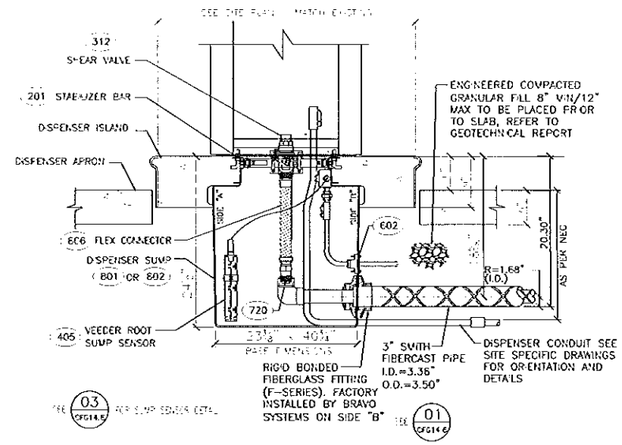

02 CFG14.6 TYPICAL DISPENSER SUMP DETAILS
SCALE: 1/2" = 1'-0"

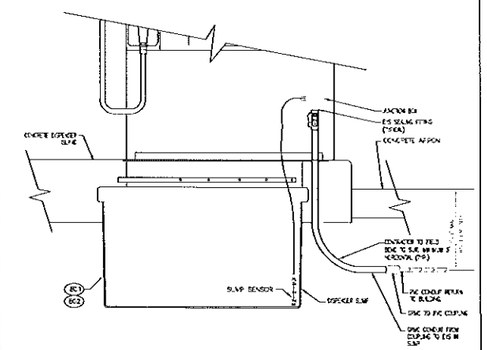

03 CFG14.6 TYPICAL DISPENSER CONDUIT DETAILS
SCALE: N.T.S.

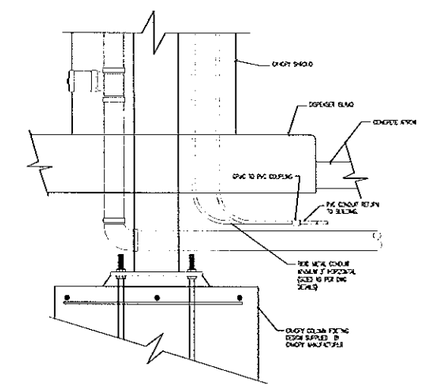

04 CFG14.6 COLUMN DETAIL
SCALE: N.T.S.

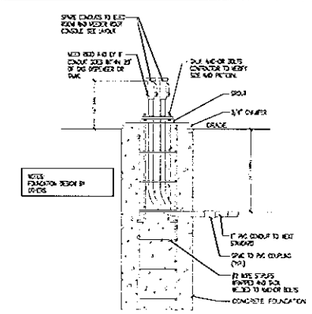

05 CFG14.6 VENT STACK DETAIL
SCALE: N.T.S.

CONDUIT #1
- DISPENSER DATA (COMMUNICATIONS) – OMNI WIRE (BELDIN WIRE IN FLORIDA)
- DISPENSER DATA (CARD READER) – OMNI WIRE (BELDIN WIRE IN FLORIDA)
- INTERCOM – OMNI WIRE (BELDIN WIRE IN FLORIDA)

CONDUIT #2
- VEEDER ROOT – OMNI WIRE

CONDUIT #3
- DISPENSER VGA SCREEN – BELDIN WIRE (#7928A)

CONDUIT #4
- DISPENSER POWER

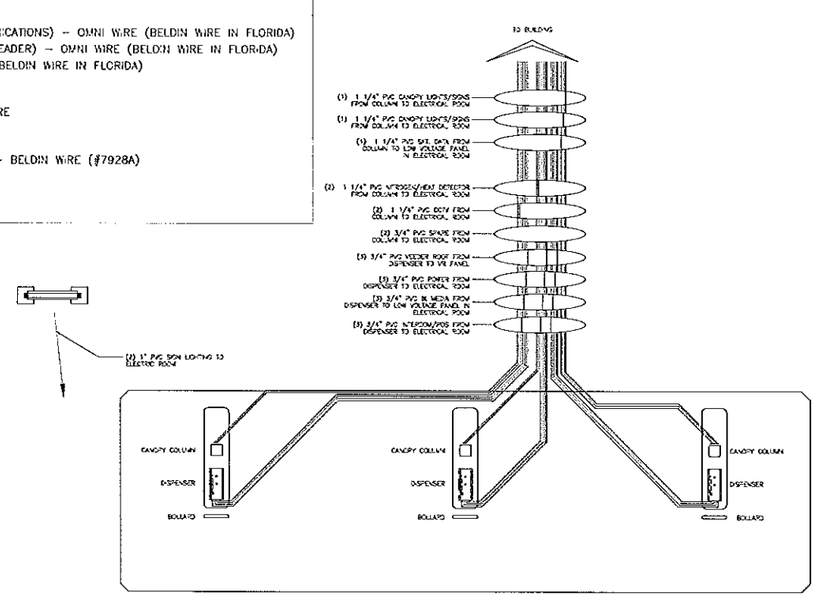

ELECTRICAL DIAGRAM
FOR TANK AND DISPENSER 8 PACK

NOTE: SEE SITE PLAN FOR ACTUAL STATION LAYOUT, NUMBER, LOCATION, ARRANGEMENT AND CONFIGURATION OF TANKS, ISLANDS AND DISPENSERS, ETC.

06 CFG14.6 TYPICAL ELECTRICAL CONDUIT LAYOUT
SCALE: N.T.S.

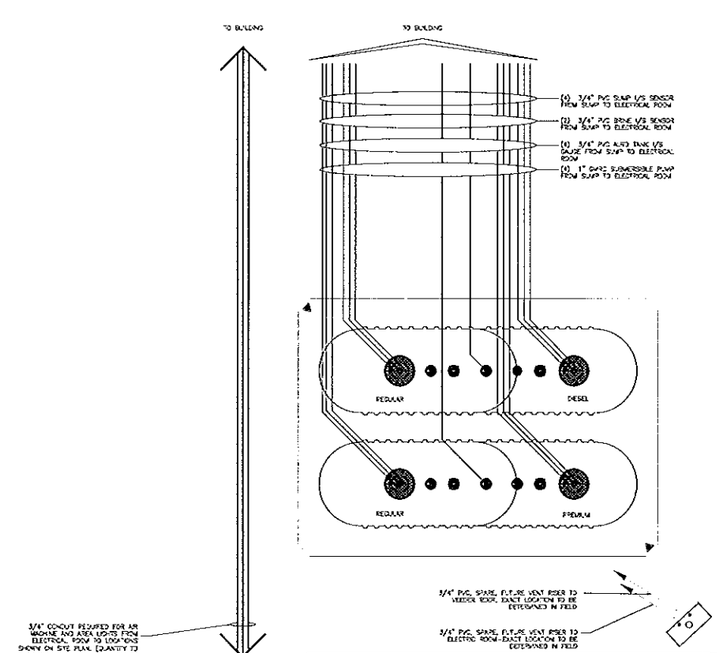

REVISIONS			
NO	DATE	REV. BY	DESCRIPTION

V# n/a
Store# n/a
Gas Station# n/a

53 & 55 MAIN STREET, FLORENCE, MA
CSI – DOUBLE WALL FIBERGLASS TANK INSTALLATION FOR
TWO (2) 20,000 (12/8 SPLIT) GALLON TANKS

Cumberland FARMS
CUMBERLAND FARMS, INC.
100 Crossing Boulevard
Framingham, MA 01702

SCALE: AS NOTED
DATE: 07/27/2015
FILE: 01 (2)12-8split_CFG14
DRAWN BY:

TANK INSTALLATION DETAILS
CFG14.6

MHF PROJECT NO. 346314 SHEET 7 OF 8

\\SERVER1\SharedData\Projects\Cumberland Farms\CFI\MA\Florence\Main\UST\CFI (2)12-8split_CFG14_6_No Stage II - 3 inline CSI.dwg CFG14.6 7/27/16 10:09am jeff

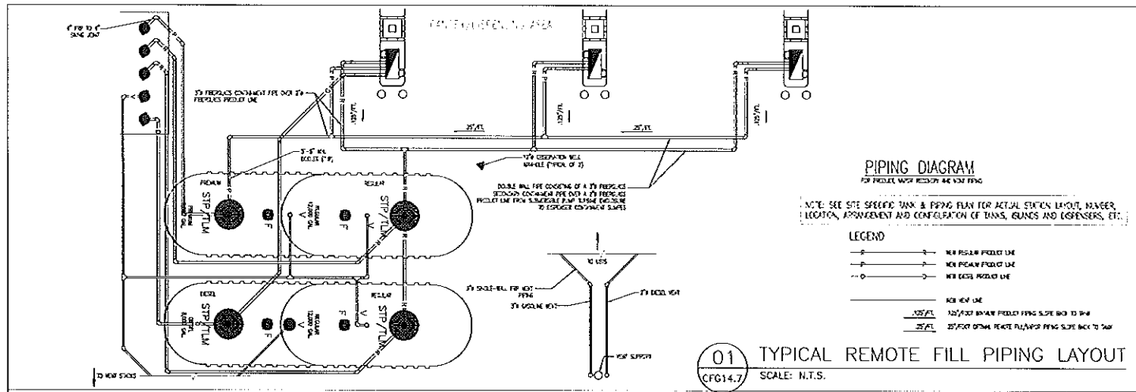

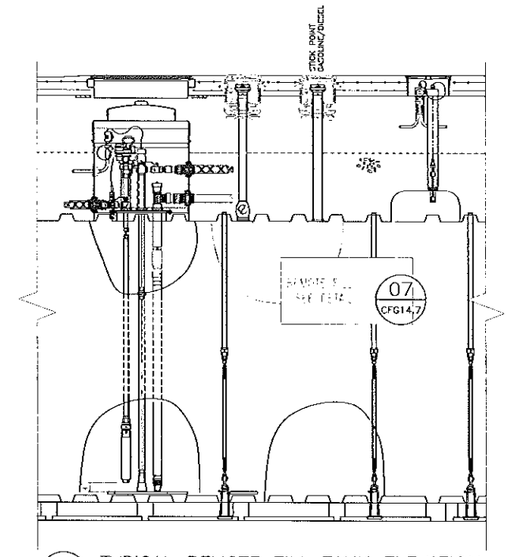

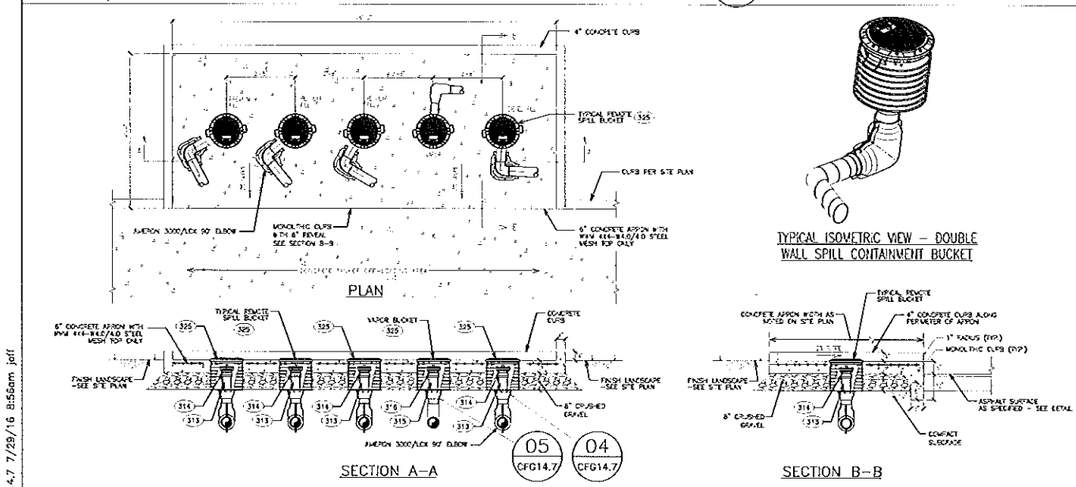

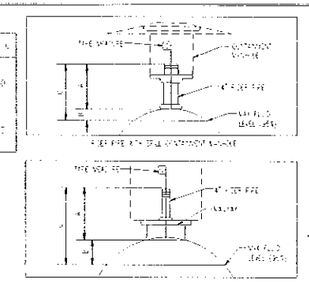

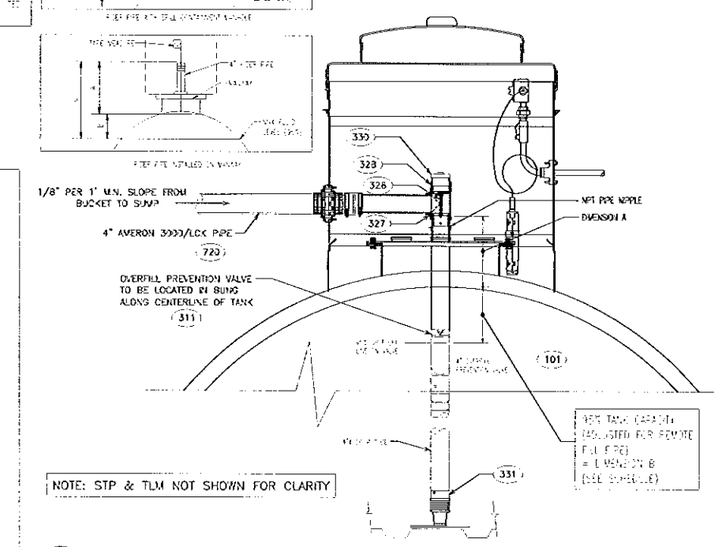

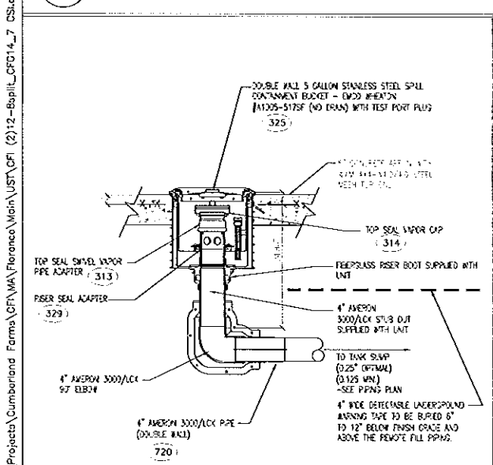

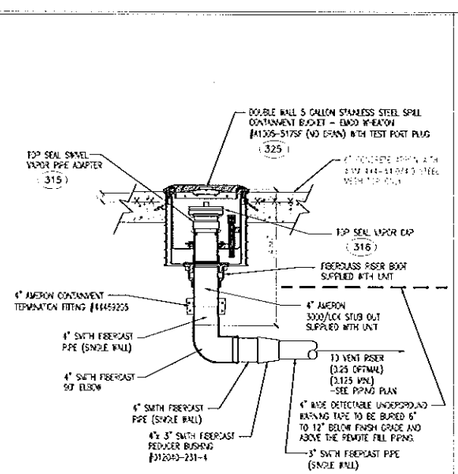

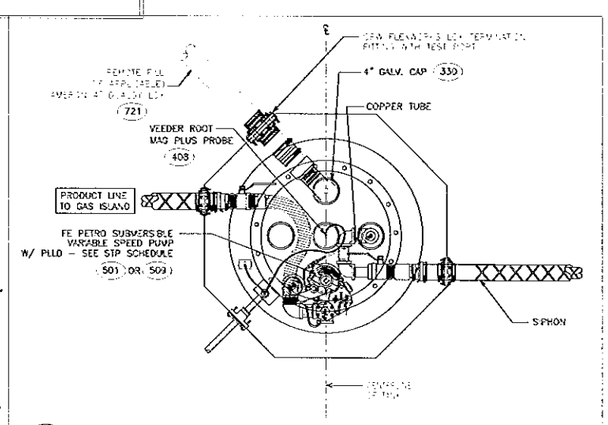

REVISIONS			
NO.	DATE	REV. BY.	DESCRIPTION

V# n/a
Store# n/a
Gas Station# n/a

53 & 55 MAIN STREET, FLORENCE, MA
CSI – DOUBLE WALL FIBERGLASS TANK INSTALLATION FOR:
TWO (2) 20,000 (12/8 SPLIT) GALLON TANKS

Cumberland FARMS
CUMBERLAND FARMS, INC.
100 Crossing Boulevard
Framingham, MA 01702

REMOTE FILL DETAILS

SCALE: AS NOTED
DATE: 07/27/2015
FILE: 01-CFG14-8-of-8_CFG14.7
DRAWN BY:
CFG14.7

WHF PROJECT NO. 346314 SHEET 8 OF 8

\\SERVER1\SharedData\Projects\Cumberland Farms\CFI\MA\Florence\Main\UST\CFI (2)12-8split_CFG14_7 CSI.dwg CFG14.7 7/28/16 8:55am jeff